Power statistics for wave propagation in one dimension and comparison with radiative transport theory*

W. Kohler†and G. C. Papanicolaou

Courant Institute of Mathematical Sciences, New York University, New York, New York
(Received 11 May 1973)

We consider a one-dimensional medium with random index of refraction or a transmission line with random capacitance per unit length, allowing for impedance mismatch at the load and generator. We compute the expected value of the incident and reflected powers at any point between the generator and load in the limit of weak fluctuations and a long line. The results are compared with those of radiative transport theory and discrepancies show the limitations of that theory. Finally, we consider the spreading of pulses due to random fluctuations.

1. INTRODUCTION

Consider a transmission line with constant inductance per unit length and capacitance per unit length which is a random function of position, fluctuating slightly from a constant expected value. The current and voltage, or the forward and backward travelling waves, are random functions of position. We wish to determine their statistical characteristics at any point between the load and generator when the line is long and the fluctuations are weak. This transmission line formulation is applicable to one-dimensional wave propagation in a random medium and the propagation of the fundamental mode in a waveguide with random inhomogeneities. These problems all lead to the same mathematical questions.

Using a general limit theorem[1,2] we compute the mean of the forward and backward propagating powers in the interior of the line for a very broad class of fluctuation processes. We also allow for passive impedance mismatch at the generator and the load. For the one-dimensional random medium the index of refraction in the absence of fluctuations is allowed to take different values in the interior and two exterior regions. When the uniform (no fluctuations) line is matched to the generator and load the above results have been obtained previously for two particular choices of fluctuation processes, one by Gazaryan[3] and one by Lang.[4]

We proceed next to compare these results to those obtained by using radiative transport theory.[5,6] Transport theory has been used to study wave propagation in waveguides and random media by Marcuse[7] and others.[8-14] The comparison shows that transport theory does not account properly for the behavior of the fields in the interior. The absolute error is not large but the relative error is often quite large (cf. Figs. 2-4, 6). Transport theory, as well as the analysis based on the limit theorem, is supposed to hold under the following general conditions: weak fluctuations, long line, and short correlation length for the fluctuations. We are led therefore to the conclusion that transport theory is not valid without additional restrictions. When the line is matched to the generator and load the two theories are in good agreement if we restrict a dimensionless line length parameter to be small. In the mismatched case the discrepancies are more pronounced as one would expect from physical considerations.

In Sec. 2 we formulate the problem under consideration both for transmission lines and one-dimensional random media and reduce it to the analysis of a stochastic two point boundary value problem. In Sec. 3 we express the solution of the boundary value problem in terms of fundamental matrices or propagators. In Sec. 4 we state the limit theorem mentioned above in the form of Ref. 2 and use it for the propagator matrices. In Sec. 5 we introduce a convenient parametrization for the matrices. Section 6 contains our main result stated as a theorem, which generalizes an observation of Gazaryan.[3] We obtain a simple heat equation for the expectation of the total power in the interior where the length of the line plays the role of time and distance from the middle of the line the space variable. In Sec. 7 we recover results of J. A. Morrison[15] concerning the mean of the modulus square of the transmission coefficient. Since the latter depends only on the length of the line, it may be called an exterior field quantity.

Section 8 contains a summary of transport theory for the present problem. Here we display graphs that show the discrepancies mentioned above.

Finally, in Sec. 9 we treat the problem of pulse spreading as a result of the fluctuations. This is conveniently done here since we can use the machinery that has been set up in previous sections.

A general survey of work on wave propagation in random media is given by Frisch.[16] More recent work is presented by Morrison and McKenna.[17]

2. FORMULATION OF THE PROBLEM

We begin with a transmission line formulation and then consider wave propagation in a one-dimensional random medium. Both problems lead to the stochastic two point boundary value problem (2.6), (2.7).

Let $V(x)$ and $I(x)$ denote the complex-valued voltage and current at x on a transmission line which occupies the interval $0 \le x \le l$. The time factor $e^{-i\omega t}$ will be omitted throughout. V and I satisfy the boundary value problem

$$\frac{dV(x)}{dx} = i\omega L(x)I(x),$$

$$\frac{dI(x)}{dx} = i\omega C(x)V(x), \qquad 0 \le x \le l, \tag{2.1}$$

$$e_g - V(0) = I(0)Z_g, \qquad V(l) = I(l)Z_l. \tag{2.2}$$

Here $L(x)$ and $C(x)$ are the inductance and capacitance per unit length, $Z_g = Z_g(\omega)$ and $Z_l(\omega)$ are the generator and load impedances and $e_g = e_g(\omega)$ is the generator voltage (cf. Fig. 1).

We wish to study (2.1) and (2.2) when $L(x) = L_0$ is constant and $C(x)$ is a random function of x which fluctuates slightly from its constant expected value C_0. Thus we let

$$C(x) = C_0 + \epsilon C_1(x), \qquad E\{C_1(x)\} = 0. \tag{2.3}$$

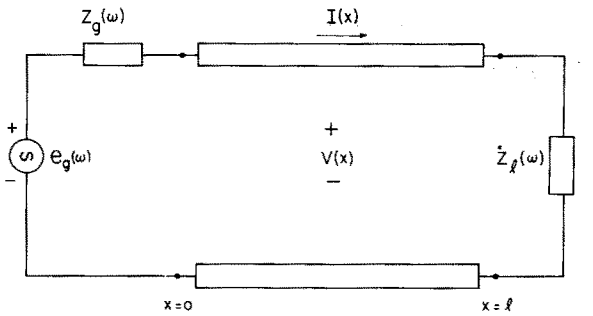

FIG. 1.

We use the notation $E\{\cdot\}$ for the operation of taking expected values and denote by ϵ a small real parameter characterising the size of the fluctuations. Other properties of $C_1(x)$ will be specified later.

Let us introduce the characteristic impedance Z_0, admittance Y_0, the speed of propagation c, and the wave number k of the uniform ($\epsilon = 0$) line.

$$Z_0 = Y_0^{-1} = (L_0/C_0)^{1/2}, \quad c = (L_0C_0)^{-1/2}, \quad k = \omega/c. \tag{2.4}$$

Let us also define forward and backward traveling wave amplitudes $A(x)$ and $B(x)$, which we expect to be "slowly varying," by

$$\begin{aligned} A(x) &= \tfrac{1}{2}e^{-ikx}[Y_0^{1/2}V(x) + Z_0^{1/2}I(x)], \\ B(x) &= \tfrac{1}{2}e^{ikx}[Y_0^{1/2}V(x) - Z_0^{1/2}I(x)]. \end{aligned} \tag{2.5}$$

On using (2.1), (2.2), and (2.3) it follows that $A(x)$ and $B(x)$ satisfy the stochastic two point boundary value problem

$$\begin{aligned} \frac{dA(x)}{dx} &= \epsilon\,\frac{ik\mu(x)}{2}[A(x) + B(x)e^{-2ikx}], \\ \frac{dB(x)}{dx} &= -\epsilon\,\frac{ik\mu(x)}{2}[A(x)e^{2ikx} + B(x)], \quad 0 \le x \le l, \end{aligned} \tag{2.6}$$

$$A(0) = E_g + \Gamma_g B(0), \quad B(l) = \Gamma_l A(l). \tag{2.7}$$

Here we have introduced the notation

$$\mu(x) = C_1(x)/C_0, \quad E_g = e_g Z_0^{1/2}/(Z_0 + Z_g) \tag{2.8}$$

$$\begin{aligned} \Gamma_g &= (Z_g - Z_0)/(Z_g + Z_0), \\ \Gamma_l &= e^{2ikl}[(Z_l - Z_0)/(Z_l + Z_0)]. \end{aligned} \tag{2.9}$$

The quantities Γ_g and Γ_l are generator and load reflection coefficients for the uniform ($\epsilon = 0$) line and E_g is a normalized generator output. When $Z_g = Z_0$ then $\Gamma_g = 0$ and the uniform line is matched to the generator while when $Z_l = Z_0$ then $\Gamma_l = 0$ and it is matched to the load. Note that A and B are complex functions of x, $0 \le x \le l$, the length of the line l and the wave number k. The dependence on k will not be displayed until Sec. 9.

Consider next a one-dimensional random medium occupying the interval $0 \le x \le l$. Let $u(x)$ and $n(x)$ be the wave field ($e^{-i\omega t}$ omitted) and the index of refraction at location x, respectively. We assume that $u(x)$, $-\infty < x < \infty$, satisfies the reduced wave equation

$$\frac{d^2u(x)}{dx^2} + k^2n^2(x)u(x) = 0, \quad -\infty < x < \infty, \tag{2.10}$$

$$n^2(x) = \begin{cases} n_1^2, & x < 0, \\ 1 + \epsilon\mu(x), & 0 \le x \le l, \\ n_2^2, & x > l, \end{cases} \tag{2.11}$$

$$u(x) \text{ and } \frac{du(x)}{dx} \text{ continuous.} \tag{2.12}$$

As before, $\mu(x)$ denotes a zero mean random process. The problem (2.10)-(2.12) is completed by specifying that a plane wave of unit amplitude is incident from the left. If we denote by R and T the complex-valued reflection and transmission coefficients, then we have

$$\begin{aligned} u(x) &= e^{ikn_1x} + Re^{-ikn_1x}, \quad x < 0, \\ u(x) &= Te^{ikn_2x}, \quad x > l. \end{aligned} \tag{2.13}$$

From (2.13) and (2.10)-(2.12) we obtain the following stochastic two point boundary value problem for $u(x)$:

$$\begin{aligned} &\frac{d^2u(x)}{dx^2} + k^2[1 + \epsilon\mu(x)]u(x) = 0, \quad 0 \le x \le l, \\ &\tfrac{1}{2}\left[u(0) + \frac{1}{ikn_1}\frac{du(0)}{dx}\right] = 1, \quad \frac{du(l)}{dx} = ikn_2u(l). \end{aligned} \tag{2.14}$$

Finally, we let

$$\begin{aligned} u(x) &= e^{ikx}A(x) + e^{-ikx}B(x) \\ \frac{du(x)}{dx} &= ik[e^{ikx}A(x) - e^{-ikx}B(x)], \quad 0 \le x \le l, \end{aligned} \tag{2.15}$$

and deduce from (2.14) that $A(x)$ and $B(x)$ satisfy the two point boundary value problem (2.6), (2.7). Instead of (2.8), (2.9) we have now

$$E_g = 2n_1/(1 + n_1), \tag{2.16}$$

$$\Gamma_g = (1 - n_1)/(1 + n_1), \quad \Gamma_l = e^{2ikl}[(1 - n_2)/(1 + n_2)]. \tag{2.17}$$

The goal in investigating (2.6), (2.7) is to compute the expected value of $|A|^2$ and $|B|^2$, the incident and reflected power, respectively, as functions of x, $0 \le x \le l$, with l variable, $l \ge 0$. We shall do this asymptotically when ϵ is small and l is large in a manner which we specify in Sec. 4.

Since the line is lossless, the power flux

$$\mathrm{Re}\{V\bar{I}\} = |A|^2 - |B|^2, \tag{2.18}$$

is independent of x, $0 \le x \le l$. In (2.18) the bar denotes complex conjugate. In view of the conservation law (2.18), instead of computing the expectations of $|A|^2$ and $|B|^2$ directly, we will compute the expectations of $|A|^2 + |B|^2$ and $|A|^2 - |B|^2$. This is done in Secs. 6 and 7, respectively.

3. PROPAGATOR MATRICES

In this section we express the solution of the stochastic boundary value problem (2.6), (2.7) in terms of propagator or fundamental solution matrices. This is convenient because the statistical properties of the latter can be obtained using limit theorems as will be shown in the next section.

Let $m(x)$ be the 2×2 matrix valued stochastic process defined by

$$m(x) = k\mu(x)\begin{pmatrix} i/2 & (i/2)e^{-2ikx} \\ -(i/2)e^{2ikx} & -i/2 \end{pmatrix}. \tag{3.1}$$

Note that $m(x) = m(x;k)$ but, until Sec. 9, we shall not

show the dependence on k explicitly. Let $Y(x)$ be any matrix valued solution of

$$\frac{dY(x)}{dx} = \epsilon m(x)Y(x).$$

Since $\mathrm{Tr}m(x) = 0$, it follows that $\det Y(x) = \text{const}$ and we take this constant to equal 1. Furthermore, because of the form of $m(x)$ in (3.1) $Y = Y(x)$ has the form

$$Y = \begin{pmatrix} a & b \\ \bar{b} & \bar{a} \end{pmatrix}, \qquad |a|^2 - |b|^2 = 1. \tag{3.2}$$

The collection of all such matrices forms a group which is denoted by $SU(1,1)$.[18]

Because the generator and load impedances are passive the reflection coefficients Γ_g and Γ_l are complex numbers of modulus less than or equal to one. Hence we may write

$$\Gamma_g = b_g/\bar{a}_g, \qquad |a_g|^2 - |b_g|^2 = 1, \tag{3.3}$$

$$\Gamma_l = -\bar{b}_l/\bar{a}_l, \qquad |a_l|^2 - |b_l|^2 = 1. \tag{3.4}$$

It is clear that a_g, b_g and a_l, b_l are not determined uniquely by (3.3) and (3.4). This, however, does not affect the results below. In view of (3.3) and (3.4) it is convenient to introduce generator and load matrices Y_g and Y_l

$$Y_g = \begin{pmatrix} a_g & b_g \\ \bar{b}_g & \bar{a}_g \end{pmatrix}, \qquad Y_l = \begin{pmatrix} a_l & b_l \\ \bar{b}_l & \bar{a}_l \end{pmatrix}. \tag{3.5}$$

These are constant matrices belonging to $SU(1,1)$.

Consider now the solution matrices $Y_1(x,0)$ and $Y_2(l,x)$ of the following initial and final value problems:

$$\frac{dY_1(x,0)}{dx} = \epsilon m(x)Y_1(x,0), \qquad x \geq 0, \quad Y_1(0,0) = Y_g, \tag{3.6}$$

$$\frac{dY_2(l,x)}{dx} = -\epsilon Y_2(l,x)m(x), \qquad x \leq l, \quad Y_2(l,l) = Y_l. \tag{3.7}$$

From the remarks above it follows that Y_1 and Y_2 are stochastic processes with values in $SU(1,1)$. Moreover, it can be verified by direct computation that $Y_2(l,x)Y_1(x,0) \in SU(1,1)$ is independent of x. For Y_1 and Y_2 we use the notation

$$Y_i = \begin{pmatrix} a_i & b_i \\ \bar{b}_i & \bar{a}_i \end{pmatrix}, \qquad |a_i|^2 - |b_i|^2 = 1, \quad i = 1,2, \tag{3.8}$$

where quantities with subscript 1 are functions of $x \geq 0$ and those with subscript 2 are functions of l and x, $0 \leq x \leq l$.

We now define $A(l,x)$ and $B(l,x)$ as follows:

$$A(l,x)/\bar{a}_g E_g = \bar{a}_2/(\bar{b}_2 b_1 + \bar{a}_2 \bar{a}_1), \tag{3.9}$$

$$B(l,x)/\bar{a}_g E_g = -\bar{b}_2/(\bar{b}_2 b_1 + \bar{a}_2 \bar{a}_1), \qquad 0 \leq x \leq l. \tag{3.10}$$

Since the denominator on the right side of (3.9) and (3.10) is the 2,2 element of $Y_2(l,x)Y_1(x,0)$ it is independent of x as observed above. From this fact and (3.6), (3.7) it follows by direct computation that $A(l,x)$ and $B(l,x)$ of (3.9) and (3.10) satisfy the boundary value problem (2.6), (2.7). We have thus the desired expressions for $A(l,x)$ and $B(l,x)$ in terms of the propagator matrices $Y_1(x,0)$ and $Y_2(l,x)$. Note that the right sides of (3.9) and (3.10) are fixed functions of the elements of Y_1 and Y_2 and are not explicitly dependent upon the generator and load matrices Y_g and Y_l.

4. LIMIT THEOREM FOR THE PROPAGATOR MATRICES

So far we have not considered the statistical nature of the problem. In this section we study the matrix valued processes $Y_1(x,0)$, $Y_2(l,x)$ of (3.6) and (3.7) through which $A(l,x)$ and $B(l,x)$ are given by (3.9) and (3.10). Until the end of this section we consider $Y_1(x,0)$ only and so we shall drop the subscript.

We observed in Sec. 3 that $Y(x,0)$ is a process with values in $SU(1,1)$ which is a Lie group.[18] We shall denote the Lie algebra of $SU(1,1)$ by $su(1,1)$ and select the following basis in $su(1,1)$:

$$\eta_1 = \tfrac{1}{2}\begin{bmatrix} i & 0 \\ 0 & -i \end{bmatrix}, \qquad \eta_2 = \tfrac{1}{2}\begin{bmatrix} 0 & 1 \\ 1 & 0 \end{bmatrix}, \qquad \eta_3 = \tfrac{1}{2}\begin{bmatrix} 0 & i \\ -i & 0 \end{bmatrix}. \tag{4.1}$$

The matrices η_1, η_2, η_3 satisfy the commutation relations

$$[\eta_1, \eta_2] = \eta_3, \qquad [\eta_1, \eta_3] = -\eta_2, \qquad [\eta_2, \eta_3] = -\eta_1. \tag{4.2}$$

In terms of this basis the $su(1,1)$ valued stochastic process $m(x)$, defined by (3.1), has the form

$$\begin{aligned} m(x) &= k\mu(x)\eta_1 + [k\mu(x)\sin 2kx]\eta_2 + [k\mu(x)\cos 2kx]\eta_3 \\ &= \sum_{j=1}^{3} m_j(x)\eta_j. \end{aligned} \tag{4.3}$$

Let C denote the class of bounded continuous functions on $SU(1,1)$ which have a finite limit at infinity. For sufficiently smooth functions in C we define the differential operators D_{η_j}, $1 \leq j \leq 3$, by

$$(D_{\eta_j} f)(Y) = \lim_{h \downarrow 0} [f(e^{h\eta_j} Y) - f(Y)]/h. \tag{4.4}$$

Here $e^{h\eta_j}$ denotes the exponential of the matrix $h\eta_j$, $1 \leq j \leq 3$, and the limit is taken with respect to the maximum norm in C. In the next section we shall express D_{η_j} concretely in terms of coordinates parametrizing $SU(1,1)$.

We now introduce hypotheses about the random function $\mu(x)$ in (3.1), where $E\{\mu(x)\} = 0$ in view of (2.3) and (2.8). We assume that $\mu(x)$, $-\infty < x < \infty$, is a stationary random function on a probability space $(\Omega, \mathfrak{F}, \mathcal{P})$ and it is almost surely bounded, say $|\mu(x)| \leq 1$. Let $\mathfrak{F}_{x_1}^{x_2} \subset \mathfrak{F}$ denote the σ-algebra generated by $\mu(x)$, $x_1 \leq x \leq x_2$. We require that $\mu(x)$ be mixing as follows: if A is any set in $\mathfrak{F}_0^x$ and B any set in $\mathfrak{F}_{x+s}^{\infty}$, then

$$\sup_{x \geq 0} |P(B|A) - P(B)| = \rho(s) \downarrow 0, \qquad s \to \infty, \tag{4.5}$$

and, in addition,

$$\int_0^\infty \rho^{1/2}(s)ds < \infty. \tag{4.6}$$

The physical meaning of (4.5) and (4.6) is that the fluctuation process $\mu(x)$ is such that $\mu(x_1)$ and $\mu(x_2)$ tend to become independent random variables sufficiently rapidly as $|x_1 - x_2| \to \infty$.

Theorem 3 of Ref. 2 can now be stated as follows. Let $\sigma = \epsilon^2 x$ and set

$$Y^{(\epsilon)}(\sigma) = Y(\sigma/\epsilon^2, 0), \tag{4.7}$$

$$u^{(\epsilon)}(\sigma, Y_g) = E\{f(Y^{(\epsilon)}(\sigma))\}, \quad f \in C. \tag{4.8}$$

Then $u^{(\epsilon)}(\sigma, Y_g)$ converges to $u^{(0)}(\sigma, Y_g)$ as $\epsilon \to 0$ and σ remains fixed, where $u^{(0)}(\sigma) = u^{(0)}(\sigma, Y_g)$ satisfies the Cauchy problem

$$\frac{\partial}{\partial \sigma} u^{(0)} = \sum_{i,j=1}^{3} a^{ij} D_{\eta_i} D_{\eta_j} u^{(0)} \equiv V u^{(0)},$$
$$\sigma > 0, \quad u^{(0)}(0, Y_g) = f(Y_g). \tag{4.9}$$

The coefficients a^{ij} are given by the formula

$$a^{ij} = \lim_{t \to \infty} \frac{1}{t} \int_{t_0}^{t} \int_{t_0}^{s} E\{m_i(\sigma) m_j(s)\} d\sigma ds, \tag{4.10}$$

which is independent of t_0 as required in Theorem 3.[2]

In view of (4.3) the a^{ij} of (4.10) can be computed explicitly. On using the fact that $D_{\eta_2} D_{\eta_3} - D_{\eta_3} D_{\eta_2} = -D_{\eta_1}$, which follows from (4.2) and (4.4), we obtain the following expression for the operator V in (4.9):

$$V = \alpha(D_{\eta_2} D_{\eta_2} + D_{\eta_3} D_{\eta_3}) + \gamma D_{\eta_1} D_{\eta_1} - \beta D_{\eta_1}, \tag{4.11}$$

$$\alpha = \frac{k^2}{2} \int_0^\infty R(s) \cos 2ks ds, \quad \beta = \frac{k^2}{2} \int_0^\infty R(s) \sin 2ks ds,$$
$$\gamma = k^2 \int_0^\infty R(s) ds, \tag{4.12}$$

$$R(s) = E\{\mu(x+s)\mu(x)\}. \tag{4.13}$$

Theorem 3 asserts,[2] in addition to the above, that if $f \in C$ is sufficiently smooth and the limit in (4.10) is approached sufficiently rapidly then the error in approximating $u^{(\epsilon)}(\sigma, Y_g)$ by $u^{(0)}(\sigma, Y_g)$ is $0(\epsilon)$.

Let $Y^{(0)}(\sigma)$, $\sigma \geq 0$, $Y^{(0)}(0) = Y_g$ be the diffusion Markov process with infinitesimal generator V given by (4.11). Since the operator V is the right invariant and independent of σ it follows that $Y^{(0)}(\sigma)$ is also a process with stationary independent increments. First, let us show that V is right invariant. Let $R_{\tilde{Y}}$, $\tilde{Y} \in SU(1,1)$, be an operator on C defined by

$$(R_{\tilde{Y}} f)(Y) = f(Y\tilde{Y}). \tag{4.14}$$

From the definitions (4.4) and (4.14), we have

$$R_{\tilde{Y}} D_{\eta_j} = D_{\eta_j} R_{\tilde{Y}}, \quad 1 \leq j \leq 3, \tag{4.15}$$

which means that the differential operators D_{η_j} commute with right translations or are right invariant. Since V in (4.11) is expressed in terms of the D_{η_j} with constant coefficients our assertion that V is right invariant follows. Now, $Y^{(0)}(\sigma)$ being a process with stationary independent increments means that if $0 \leq \sigma_1 \leq \sigma_2 \leq \cdots \leq \sigma_n < \infty$ then the random matrices

$$Y^{(0)}(\sigma_1) Y_g^{-1},$$
$$Y^{(0)}(\sigma_2)[Y^{(0)}(\sigma_1)]^{-1}, \ldots, Y^{(0)}(\sigma_n)[Y^{(0)}(\sigma_{n-1})]^{-1}, \tag{4.16}$$

are independent and their distribution depends only on the increments of the parameter: $\sigma_1, \sigma_2 - \sigma_1, \ldots, \sigma_n - \sigma_{n-1}$.

Theorem 3 of Ref. 2 shows that for a fixed σ, $Y^{(\epsilon)}(\sigma)$ converges weakly to $Y^{(0)}(\sigma)$ as $\epsilon \to 0$. The argument used there, however, can be used to show that all finite dimensional distributions of $Y^{(\epsilon)}(\sigma)$ converge to those of $Y^{(0)}(\sigma)$, $\sigma < \infty$. Weak convergence of the processes requires additional argument but we do not need it here.

Let $\tau = \epsilon^2 l$. In view of the definition (4.4) of $Y^{(\epsilon)}(\sigma)$ and (3.6), (3.7) we have, as $\epsilon \to \infty$,

$$Y_1(\sigma/\epsilon^2, 0) = Y^{(\epsilon)}(\sigma) \to Y^{(0)}(\sigma), \quad \sigma \geq 0, \tag{4.17}$$

$$Y_2(\tau/\epsilon^2, \sigma/\epsilon^2) = Y_l Y^{(\epsilon)}(\tau)[Y^{(\epsilon)}(\sigma)]^{-1}$$
$$\to Y_l Y^{(0)}(\tau)[Y^{(0)}(\sigma)]^{-1}, \quad 0 \leq \sigma \leq \tau. \tag{4.18}$$

Here the arrow denotes weak convergence and, because of the independent increments property of $Y^{(0)}$, the limit matrices corresponding to Y_1 and Y_2 are independent.

The distribution of $Y_l Y^{(0)}(\tau)[Y^{(0)}(\sigma)]^{-1}$ can be obtained in the following way, similar to the one for $Y^{(0)}(\sigma)$. Let $f \in C$ and $u^{(0)}(\tau - \sigma, Y_l) = E\{f(Y_l Y^{(0)}(\tau)[Y^{(0)}(\sigma)]^{-1})\}$. Then $u^{(0)}(\sigma, Y_l)$ satisfies the Cauchy problem

$$\frac{\partial}{\partial \sigma} u^{(0)} = \tilde{V} u^{(0)}, \quad \sigma \geq 0, \quad u^{(0)}(0, Y_l) = f(Y_l), \tag{4.19}$$

where $\tilde{V}$ is identical with V of (4.11) except the differential operators D_{η_j} are replaced by $\tilde{D}_{\eta_j}$ and

$$(\tilde{D}_{\eta_j} f)(Y) = \lim_{h \downarrow 0} \frac{f(Ye^{h\eta_j}) - f(Y)}{h}, \quad 1 \leq j \leq 3. \tag{4.20}$$

The result (4.19) is convenient because it takes care of the final value condition for Y_2 in (3.7) in the same way that the initial condition for Y_1 is taken care of in the limit by conditioning $Y^{(0)}(\sigma)$ so that $Y^{(0)}(0) = Y_g$.

5. POLAR COORDINATES

In order to implement the asymptotic results of the previous section we must introduce a convenient parametrization of $SU(1,1)$. This is done by the Euler angle or polar coordinate parametrization[19]

$$Y = \begin{pmatrix} a & b \\ \bar{b} & \bar{a} \end{pmatrix} = \begin{pmatrix} e^{i(\phi+\psi)/2} \cosh(\theta/2) & e^{i(\phi-\psi)/2} \sinh(\theta/2) \\ e^{-i(\phi-\psi)/2} \sinh(\theta/2) & e^{-i(\phi+\psi)/2} \cosh(\theta/2) \end{pmatrix}, \tag{5.1}$$

$$0 \leq \theta < \infty, \quad 0 \leq \phi < 2\pi, \quad 0 \leq \psi < 4\pi. \tag{5.2}$$

The coordinates (θ, ϕ, ψ) are global coordinates on $SU(1,1)$. Functions on $SU(1,1)$ are simply functions of (θ, ϕ, ψ). In (5.2) we could have allowed $\phi \in [0, 4\pi)$ and $\psi \in [0, 2\pi)$ and, in considerations below when one of these angles plays no role we always assume it is the one in $[0, 4\pi)$.

Let us represent the reflection coefficients (3.3), (3.4) as

$$\Gamma_g = e^{i\varphi_g} \tanh(\theta_g/2), \quad \Gamma_l = -e^{i\psi_l} \tanh(\theta_l/2). \tag{5.3}$$

From (3.5) and (5.3) the generator and load matrices become

$$Y_g = \begin{pmatrix} e^{i\varphi_g/2} \cosh(\theta_g/2) & e^{i\varphi_g/2} \sinh(\theta_g/2) \\ e^{-i\varphi_g/2} \sinh(\theta_g/2) & e^{-i\varphi_g/2} \cosh(\theta_g/2) \end{pmatrix}, \tag{5.4}$$

$$Y_l = \begin{pmatrix} e^{i\psi_l/2} \cosh(\theta_l/2) & e^{-i\psi_l/2} \sinh(\theta_l/2) \\ e^{i\psi_l/2} \sinh(\theta_l/2) & e^{-i\psi_l/2} \cosh(\theta_l/2) \end{pmatrix}. \tag{5.5}$$

Here we have resolved the multivaluedness mentioned after (3.4) by taking $\psi_g = 0$ and $\phi_l = 0$. We shall also consider ψ_l as a fixed parameter of the problem and not affected by the asymptotic limit of the previous section even though, in view of (2.9), ψ_l depends explicitly on l.

The processes $Y_1(x,0)$ and $Y_2(l,x)$ of (3.6), (3.7) are parametrized by (5.1) with subscripts 1 and 2 on (θ,ϕ,ψ). As in the previous section we introduce the notation

$$\theta_1^{(\epsilon)}(\sigma) = \theta_1(\sigma/\epsilon^2), \quad \phi_1^{(\epsilon)}(\sigma) = \phi_1(\sigma/\epsilon^2), \quad \psi_1^{(\epsilon)}(\sigma) = \psi_1(\sigma/\epsilon^2), \quad \sigma = \epsilon^2 x, \tag{5.6}$$

$$\theta_2^{(\epsilon)}(\tau,\sigma) = \theta_2(\tau/\epsilon^2,\sigma/\epsilon^2), \quad \phi_2^{(\epsilon)}(\tau,\sigma) = \phi_2(\tau/\epsilon^2,\sigma/\epsilon^2), \quad \psi_2^{(\epsilon)}(\tau,\sigma) = \psi_2(\tau/\epsilon^2,\sigma/\epsilon^2), \quad \tau = \epsilon^2 l. \tag{5.7}$$

The limit process $Y^{(0)}(\sigma)$ is parametrized by $(\theta^{(0)}(\sigma), \phi^{(0)}(\sigma), \psi^{(0)}(\sigma))$.

From their definition in (4.4) and (5.1) it follows by direct computation that the differential operators D_{η_i}, $1 \le i \le 3$, are given by

$$D_{\eta_1} = \frac{\partial}{\partial\phi}, \tag{5.8}$$

$$D_{\eta_2} = -\sin\phi \coth\theta \frac{\partial}{\partial\phi} + \sin\phi \operatorname{csch}\theta \frac{\partial}{\partial\psi} + \cos\phi \frac{\partial}{\partial\theta}, \tag{5.9}$$

$$D_{\eta_3} = \cos\phi \coth\theta \frac{\partial}{\partial\phi} - \cos\phi \operatorname{csch}\theta \frac{\partial}{\partial\psi} + \sin\phi \frac{\partial}{\partial\theta}. \tag{5.10}$$

On using (5.8)-(5.10) in (4.11), V becomes

$$V = \alpha\left[\frac{\partial^2}{\partial\theta^2} + \coth\theta \frac{\partial}{\partial\theta} + \left(\coth\theta \frac{\partial}{\partial\phi} - \operatorname{csch}\theta \frac{\partial}{\partial\psi}\right)^2\right] + \gamma \frac{\partial^2}{\partial\phi^2} - \beta \frac{\partial}{\partial\phi}. \tag{5.11}$$

Similarly, for $\tilde{V}$ of (4.19) we obtain the same expression (5.11) but with ϕ and ψ interchanged.

We must also express the quantities of interest $|A(l,x)|^2$ and $|B(l,x)|^2$, where A and B are given by (3.9), (3.10), in terms of the parametrization (5.1). A straightforward computation yields

$$\frac{|A(l,x)|^2}{P_{\max}} = \frac{1 + \cosh\theta_2}{1 + \cosh\theta_1 \cosh\theta_2 + \sinh\theta_1 \sinh\theta_2 \cos(\phi_1 + \psi_2)}, \tag{5.12}$$

$$\frac{|B(l,x)|^2}{P_{\max}} = \frac{-1 + \cosh\theta_2}{1 + \cosh\theta_1 \cosh\theta_2 + \sinh\theta_1 \sinh\theta_2 \cos(\phi_1 + \psi_2)}, \tag{5.13}$$

$$P_{\max} = |E_g|^2 \cosh^2 \frac{\theta_g}{2} = \frac{|e_g|^2}{4\,\mathrm{Re}(Z_g)}. \tag{5.14}$$

Here we have omitted arguments on the random functions $(\theta_i, \phi_i, \psi_i)$, $i = 1, 2$, to simplify the notation. The last equality in (5.14) follows from (2.8), (2.9), and (5.3). $P_{\max}$ is the maximum power available from the generator. The quantities on the left sides of (5.12) and (5.13) are therefore normalized incident and reflected powers, respectively, at position x, $0 \le x \le l$, for a line of length l. Note that in both (5.12) and (5.13) ψ_1 and ϕ_2 are absent. This leads to substantial simplification in the analysis that follows.

Let $f(\theta,\phi)$ be a bounded continuous function on $SU(1,1)$ independent of ψ. Such a function may be regarded as a function on the hyperbolic disc which is identified with the space of right cosets[18] of $SU(1,1)$ modulo the subgroup generated by $e^{\psi\eta_1}$. The limit theorem of Sec. 4 in conjunction with (5.11) and the ψ independence of f imply that

$$\lim_{\epsilon\to 0} E\{f(\theta_1^{(\epsilon)}(\sigma), \phi_1^{(\epsilon)}(\sigma))\} = u_1(\sigma,\theta,\phi)\Big|_{\substack{\theta=\theta_g\\ \phi=\phi_g}}, \tag{5.15}$$

where u_1 satisfies the Cauchy problem

$$\frac{\partial u_1}{\partial\sigma} = Mu_1, \quad \sigma > 0, \quad u_1(0,\theta,\phi) = f(\theta,\phi), \tag{5.16}$$

$$M = \Delta + L, \quad \Delta = \alpha\left(\frac{\partial^2}{\partial\theta^2} + \coth\theta \frac{\partial}{\partial\theta} + \operatorname{csch}^2\theta \frac{\partial^2}{\partial\phi^2}\right),$$
$$L = (\gamma + \alpha)\frac{\partial^2}{\partial\phi^2} - \beta\frac{\partial}{\partial\phi}, \quad 0 < \theta < \infty, \quad 0 \le \phi < 2\pi. \tag{5.17}$$

Note that Δ is the Laplace-Beltrami operator on the hyperbolic disc.[18] L is a simple differential operator with constant coefficients which commutes with Δ.

As indicated at the end of Sec. 4 the limit of the process $(\theta_2^{(\epsilon)}, \phi_2^{(\epsilon)}, \psi_2^{(\epsilon)})$ can be characterized in the same manner as (5.15). We have to replace M by the operator that corresponds to $\tilde{V}$ of (4.19). Thus, we have the following result. Let $f(\theta,\psi)$ be a bounded continuous function on $SU(1,1)$ independent of ϕ. Then

$$\lim_{\epsilon\to 0} E\{f(\theta_2^{(\epsilon)}(\tau,\sigma), \psi_2^{(\epsilon)}(\tau,\sigma))\} = u_2(\tau-\sigma,\theta,\psi)\Big|_{\substack{\theta=\theta_l\\ \psi=\psi_l}}, \tag{5.18}$$

where $u_2(\sigma,\theta,\psi)$ satisfies the Cauchy problem (5.16), (5.17) with ϕ everywhere replaced by ψ.

Both u_1 and u_2 can be expressed conveniently in terms of the transition probability density $P(\sigma;\theta,\phi;\theta_0,\phi_0)$ of the process $(\theta^{(0)}(\sigma), \phi^{(0)}(\sigma))$ which at $\sigma = 0$ takes the value (θ_0,ϕ_0). P is a density relative to the volume element $\sinh\theta\, d\theta\, d\phi$ and satisfies the forward equation

$$\frac{\partial P}{\partial\sigma} = (\Delta + L^*)P, \quad \sigma > 0,$$
$$P(0;\theta,\phi;\theta_0,\phi_0) = \delta(\cosh\theta - \cosh\theta_0)\cdot\delta(\phi - \phi_0). \tag{5.19}$$

Here L^* is given by

$$L^* = (\gamma + \alpha)\frac{\partial^2}{\partial\phi^2} + \beta\frac{\partial}{\partial\phi}, \tag{5.20}$$

and δ denotes the ordinary delta function. The solution of (5.20) is

$$P(\sigma;\theta,\phi;\theta_0,\phi_0) = \sum_{m=-\infty}^{\infty} e^{-[m^2(\gamma+\alpha)+im\beta]\sigma}\left(\frac{e^{im(\phi-\phi_0)}}{2\pi} \times \int_0^\infty e^{-[\nu^2+(1/4)]\alpha\sigma} \frac{\nu\sinh\pi\nu}{\pi}\Gamma(\tfrac{1}{2} - |m| + i\nu) \times \Gamma(\tfrac{1}{2} - |m| - i\nu) P_{-1/2+i\nu}^{|m|}(\cosh\theta) P_{-1/2+i\nu}^{|m|}(\cosh\theta_0)\, d\nu\right). \tag{5.21}$$

Here $w(v) = P_{-1/2+i\nu}^{m}(v)$ is the conical Legendre function and it satisfies the equation[20]

$$\frac{d}{dv}\left((v^2-1)\frac{dw}{dv}\right) - \frac{m^2}{v^2-1}w = -(\nu^2 + \tfrac{1}{4})w, \quad v > 1. \tag{5.22}$$

We can now invoke the independence of the limits of Y_1 and Y_2 in (4.17), (4.18) and apply the above results to $|A|^2$ and $|B|^2$ of (5.12), (5.13). This yields the main result of this section

$$\frac{1}{P_{\max}} \lim_{\epsilon\to 0} E\left\{\begin{matrix}|A(\tau/\epsilon^2,\sigma/\epsilon^2)|^2\\ |B(\tau/\epsilon^2,\sigma/\epsilon^2)|^2\end{matrix}\right\} = \int_0^\infty\int_0^{2\pi}\int_0^\infty\int_0^{2\pi} \frac{\pm 1 + \cosh\theta_2}{1 + \cosh\theta_1 \cosh\theta_2 + \sinh\theta_1 \sinh\theta_2 \cos(\phi_1 + \psi_2)}$$
$$\times P(\sigma;\theta_1,\phi_1;\theta_g,\phi_g)P(\tau-\sigma;\theta_2,\psi_2;\theta_l,\psi_l)\sinh\theta_1 \sinh\theta_2 d\theta_1 d\phi_1 d\theta_2 d\psi_2. \quad (5.23)$$

Here the + sign corresponds to $|A|^2$ and the − sign to $|B|^2$.

When $x = l$ then $\sigma = \tau = \epsilon^2 l$ and $e^{i\phi^{(0)}}(\tau)\tanh\theta^{(0)}(\tau)/2$ is the right reflection coefficient[19] of the line. Thus, (5.21) is the joint transition probability density of the amplitude and phase of the reflection coefficient in the usual asymptotic limit. Note that in the matched case $\theta_0 = 0$, the phase is uniformly distributed and in any case when τ is large the phase is approximately uniformly distributed. To obtain the joint transition probability density of the left reflection coefficient $-e^{i\psi^{(0)}(\tau)}\tanh\theta^{(0)}(\tau)/2$, we note from (5.11) that we must solve (5.19) with L^* omitted and with ϕ and ϕ_0 replaced by ψ and ψ_0. The solution is

$$P(\tau;\theta,\psi;\theta_0,\psi_0) = \sum_{m=-\infty}^{\infty} \frac{e^{im(\psi-\psi_0)}}{2\pi} \cdot \int_0^\infty e^{-(\nu^2+1/4)\alpha\tau} \frac{\nu \sinh\pi\nu}{\pi} \times \Gamma(\tfrac{1}{2} - |m| + i\nu)\Gamma(\tfrac{1}{2} - |m| - i\nu) \times P^{|m|}_{-1/2+i\nu}(\cosh\theta) P^{|m|}_{-1/2+i\nu}(\cosh\theta_0) d\nu. \quad (5.24)$$

Again, if $\theta_0 = 0$, the matched case, the phase is uniformly distributed in our asymptotic limit for all $\tau \geq 0$.

However, contrary to what happens with the right reflection coefficient the phase is not uniform or approximately uniform for $\tau \geq 0$ in the mismatched case. Results about the phase of reflection coefficients have been reported recently in Refs. 21-23.

6. HEAT EQUATION FOR THE TOTAL POWER IN THE INTERIOR

According to the remarks at the end of Sec. 2, it is convenient to compute the expectations of $|A|^2 + |B|^2$ and $|A|^2 - |B|^2$ in the asymptotic limit of Sec. 4. In this section we consider the expectation of the total power $J(\tau,\xi)$, $\tau \geq 0$, $-\tau/2 \leq \xi \leq \tau/2$, defined by

$$J(\tau,\xi) = P_{\max}^{-1} \lim_{\epsilon\to 0} E\{|A(\tau/\epsilon^2,(\xi+\tau/2)/\epsilon^2)|^2 + |B(\tau/\epsilon^2,(\xi+\tau/2)/\epsilon^2)|^2\}. \quad (6.1)$$

Clearly $J = J(\tau,\xi;\theta_g,\phi_g;\theta_l,\psi_l)$ but we shall not indicate the dependence on the generator and load parameters explicitly. The variable $\tau = \epsilon^2 l$ is the scaled line length, as in the two previous sections, and ξ is scaled distance from the midpoint $\tau/2$ of the line.

The purpose of this section is to prove the following theorem which generalizes an observation of Gazaryan.[3]

Theorem: Let $J(\tau,\xi)$ be defined by (6.1) and α,β,γ by (4.12). Then $J(\tau,\xi)$ is defined for $\tau \geq 0$ and $-\infty < \xi < \infty$. Moreover,

$$J(\tau,\xi) = \sum_{m=-\infty}^{\infty} J_m(\tau,\xi), \quad (6.2)$$

where

$$\frac{\partial}{\partial\tau} J_m(\tau,\xi) = \frac{1}{4\alpha}\frac{\partial^2}{\partial\xi^2} J_m(\tau,\xi) - \kappa_m J_m(\tau,\xi), \quad \tau > 0, \quad -\infty < \xi < \infty, \quad (6.3)$$

and

$$J_m(0,\xi) = \frac{\pi}{2i} e^{im(\phi_g+\psi_l)} e^{-\alpha\xi} \int_{-\infty}^{\infty} \frac{\sinh\pi t\Gamma(\frac{1}{2} - |m| + it)}{\cosh^2\pi t\Gamma(\frac{1}{2} + |m| + it)} \times P^{|m|}_{-1/2+it}(\cosh\theta_g)\{(\tfrac{1}{2} + it - |m|)P^{|m|}_{-3/2-it}(\cosh\theta_l) \times e^{-i2\alpha\xi t} - (\tfrac{1}{2} - it - |m|)P^{|m|}_{-3/2+it}(\cosh\theta_l)e^{i2\alpha\xi t}\} dt, \quad -\infty < \xi < \infty, \quad (6.4)$$

$$\kappa_m = (\gamma + \alpha)m^2 + i\beta m. \quad (6.5)$$

Proof: Let $u = \cosh\theta_1$, $v = \cosh\theta_2$, $\phi = \phi_1$, $\psi = \psi_2$ and define $f(u,v,\phi,\psi)$ by

$$f(u,v,\phi,\psi) = 2v/[1 + uv + \sqrt{u^2-1}\sqrt{v^2-1}\cos(\phi+\psi)]. \quad (6.6)$$

Then, from (5.23) and (6.1) it follows that

$$J(\tau,\xi) = \int_1^\infty\int_0^{2\pi}\int_1^\infty\int_0^{2\pi} f(u,v,\phi,\psi)P(\tau/2+\xi;u,\phi;u_g,\phi_g) \times P(\tau/2-\xi;v,\psi;v_l,\psi_l)du d\phi dv d\psi, \quad (6.7)$$

where $u_g = \cosh\theta_g$, $v_l = \cosh\theta_l$.

We observe now that the denominator on the right side of (6.6) is related to the law of cosines on the hyperbolic disc. Then we define $\zeta \geq 0$ by

$$\cosh\zeta = uv - \sqrt{u^2-1}\sqrt{v^2-1}\cos(\phi+\psi+\pi), \quad (6.8)$$

and rewrite (6.6) in the form

$$f(u,v,\phi,\psi) = 2v/(1 + \cosh\zeta). \quad (6.9)$$

We proceed next to obtain a Fourier expansion of f. For this we need the following facts concerning Legendre functions:[20]

$$\frac{2}{1+\cosh\zeta} = \pi\int_{-\infty}^{\infty} \frac{t\sinh\pi t}{\cosh^2\pi t} P_{-1/2+it}(\cosh\zeta)dt, \quad (6.10)$$

$$P_\nu(\cosh\zeta) = \sum_{m=-\infty}^{\infty} \frac{\Gamma(\nu - |m| + 1)}{\Gamma(\nu + |m| + 1)} P_\nu^{|m|}(u)P_\nu^{|m|}(v)e^{im(\phi+\psi)}, \quad (6.11)$$

$$P_\nu^m(u) = P_{-\nu-1}^m(u), \quad (6.12)$$

$$uP_\nu^{|m|}(u) = \frac{1}{2\nu+1}[(\nu - |m| + 1)P_{\nu+1}^{|m|}(u) + (\nu + |m|)P_{\nu-1}^{|m|}(u)]. \quad (6.13)$$

On using (6.10)-(6.13) in (6.9) we find, after some rearrangements, that

$$\frac{2v}{1+\cosh\zeta} = \sum_{m=-\infty}^{\infty} Q_{|m|}(u,v)e^{im(\phi+\psi)}, \quad (6.14)$$

where

$$Q_{|m|}(u,v) = \frac{\pi}{2i}\int_{-\infty}^{\infty} \frac{\sinh\pi t\Gamma(\frac{1}{2}-|m|+it)}{\cosh^2\pi t\Gamma(\frac{1}{2}+|m|+it)} P^{|m|}_{-1/2+it}(u) \times \{[-(|m|-1/2)+it]P^{|m|}_{-3/2-it}(v) + [(|m|-\tfrac{1}{2})+it]P^{|m|}_{-3/2+it}(v)\}dt. \quad (6.15)$$

We return now to (6.7), substitute for f the expression (6.14) and perform the ϕ and ψ integrations. This yields

$$J(\tau,\xi) = \sum_{m=-\infty}^{\infty} J_m(\tau,\xi), \quad (6.16)$$

where

$$J_m(\tau,\xi) = \int_1^{\infty}\int_1^{\infty} Q_{|m|}(u,v)\hat{P}_m(\tau/2+\xi)\hat{P}_m(\tau/2-\xi)dudv \quad (6.17)$$

and $\hat{P}_m(\sigma) = \hat{P}_m(\sigma;u;u_0,\phi_0)$ is defined by

$$\hat{P}_m(\sigma) = \int_0^{2\pi} P(\sigma;u,\phi;u_0,\phi_0)e^{im\phi}d\phi. \quad (6.18)$$

$P(\sigma)$ satisfies (5.19) and it is given explicitly by (5.21). From (5.19) and (6.18) it follows that $\hat{P}_m(\sigma;u;u_0,\phi_0)$ satisfies the Cauchy problem

$$\frac{\partial}{\partial\sigma}\hat{P}_m = \alpha\Delta_{1,m}\hat{P}_m - \kappa_m\hat{P}_m, \quad \hat{P}_m(0) = e^{im\varphi_0}\delta(u-u_0), \quad (6.19)$$

$$\Delta_{1,m} = \frac{\partial}{\partial u}\left[(u^2-1)\frac{\partial}{\partial u}\right] - \frac{m^2}{u^2-1}, \quad u>1, \quad (6.20)$$

and κ_m is given by (6.5).

Let us rewrite (6.17) using operator notation, (6.19) and (6.20). We have

$$J_m(\tau,\xi) = e^{im(\varphi_g+\psi_l)}\cdot\{e^{(\tau/2+\xi)(\alpha\Delta_{1,m}-\kappa_m)+(\tau/2-\xi)(\alpha\Delta_{2,m}-\kappa_m)}Q_{|m|}\}(u_g,v_l) = e^{im(\varphi_g+\psi_l)-\tau\kappa_m}\{e^{\alpha(\tau/2+\xi)\Delta_{1,m}+\alpha(\tau/2-\xi)\Delta_{2,m}}Q_{|m|}\}(u_g,v_l). \quad (6.21)$$

In (6.21) $\Delta_{1,m}$ acts only on the first argument of $Q_{|m|}(u,v)$ and $\Delta_{2,m}$ is the same as $\Delta_{1,m}$ but acts on the second argument of $Q_{|m|}$. Thus $\Delta_{1,m}$ and $\Delta_{2,m}$ commute. By direct differentiation of (6.21) it follows that (6.3) holds provided that

$$(\Delta_{1,m}+\Delta_{2,m})Q_{|m|} = \tfrac{1}{2}(\Delta_{1,m}-\Delta_{2,m})^2Q_{|m|}. \quad (6.22)$$

To check that (6.22) is indeed true we need only employ the following relations in the definition (6.15) of $Q_{|m|}$:

$$\Delta_{1,m}P^{|m|}_{-1/2+it}(u)P^{|m|}_{-3/2\pm it}(v) = -(t^2+\tfrac{1}{4})P^{|m|}_{-1/2+it}(u)P^{|m|}_{-3/2\pm it}(v), \quad (6.23)$$

$$\Delta_{2,m}P^{|m|}_{-1/2+it}(u)P^{|m|}_{-3/2\pm it}(v) = -(t^2\pm 2it-\tfrac{3}{4})P^{|m|}_{-1/2+it}(u)P^{|m|}_{-3/2\pm it}(v). \quad (6.24)$$

This completes the proof of (6.3).

To compute the initial value $J_m(0,\xi)$ we set $\tau=0$ in (6.21) and obtain

$$J_m(0,\xi) = e^{im(\varphi_g+\psi_l)}\{e^{\alpha\xi(\Delta_{1,m}-\Delta_{2,m})}Q_{|m|}\}(u_g,v_l). \quad (6.25)$$

Using (6.23) and (6.24) in the definition (6.15) of $Q_{|m|}$, it follows that

$$([\Delta_{1,m}-\Delta_{2,m}]Q_{|m|})(u_g,v_l) = \frac{\pi}{2i}\int_{-\infty}^{\infty}\frac{\sinh\pi t\Gamma(\frac{1}{2}-|m|+it)}{\cosh^2\pi t\Gamma(\frac{1}{2}+|m|+it)}P^{|m|}_{-1/2+it}(u_g) \times\{[-(|m|-\tfrac{1}{2})+it]P^{|m|}_{-3/2-it}(v_l)(-1-2it) + [(|m|-\tfrac{1}{2})+it]P^{|m|}_{-3/2+it}(v_l)(-1+2it)\}dt. \quad (6.26)$$

By formally expanding the exponential in (6.25) and using (6.26) and its iterates, and performing a few rearrangements, the result (6.4) follows. This completes the proof of the theorem.

When the line is matched then $\Gamma_g = \Gamma_l = 0$ and hence, from (5.3), $\theta_g = \theta_l = 0$. Since $P^{|m|}_{\nu}(1) = 0$, $m \neq 0$ it follows from (6.5) that

$$J_m(\tau,\xi) = 0, \quad m\neq 0. \quad (6.27)$$

Thus $J(\tau,\xi) = J_0(\tau,\xi)$ and

$$\frac{\partial J}{\partial\tau} = \frac{1}{4\alpha}\frac{\partial^2 J}{\partial\xi^2}, \quad \tau>0, \quad (6.28)$$

$$J(0,\xi) = \pi e^{-\alpha\xi}\int_{-\infty}^{\infty}\frac{t\sinh\pi t}{\cosh^2\pi t}\left(\cos 2\alpha\xi t - \frac{\sin 2\alpha\xi t}{2t}\right)dt = 1-\tanh\alpha\xi - \frac{\alpha\xi}{\cosh^2\alpha\xi}. \quad (6.29)$$

This is the result Gazaryan[3] obtained for a very special kind of fluctuation process $\mu(x)$, and so the theorem above is indeed a generalization of it.

Equations (6.3) can be solved explicitly in an elementary manner. Thus, we have

$$J(\tau,\xi) = \sum_{m=-\infty}^{\infty} e^{im(\varphi_g+\psi_l)-\kappa_m\tau}\sqrt{\frac{\alpha}{\pi\tau}}\int_{-\infty}^{\infty}e^{-\alpha(\xi-\eta)^2/\tau}\tilde{J}_m(0,\eta)d\eta. \quad (6.30)$$

Here $\tilde{J}_m(0,\xi)$ is identical with (6.4) with the factor $e^{im(\varphi_g+\psi_l)}$ omitted. Using (6.4) in (6.30), performing the η integration and rearranging yields

$$J(\tau,\xi) = e^{\alpha(\tau/2)-\alpha\xi}\sum_{m=-\infty}^{\infty}e^{im(\varphi_g+\psi_l)-\kappa_m\tau} \times \pi\int_{-\infty}^{\infty}e^{-\alpha\tau(t^2+\frac{1}{4})}\frac{t\sinh\pi t\Gamma(\frac{1}{2}-|m|+it)}{\cosh^2\pi t\Gamma(\frac{1}{2}+|m|+it)} \times P^{|m|}_{-1/2+it}(\cosh\theta_g)\{\cosh\theta_l\cos\alpha t(\tau-2\xi)P^{|m|}_{-1/2+it}(\cosh\theta_l) - \frac{\sin\alpha t(\tau-2\xi)}{2t}[(\tfrac{1}{2}-|m|+it)P^{|m|}_{-3/2-it}(\cosh\theta_l) + (\tfrac{1}{2}-|m|-it)P^{|m|}_{-3/2+it}(\cosh\theta_l)]\}dt. \quad (6.31)$$

In Sec. 5, below (5.5) we observed that ψ_l depends explicitly on l. Since $l=\tau/\epsilon^2$ is going to infinity as $\epsilon\to 0$ only $J_0(\tau,\xi)$ in (6.2) is meaningful physically. The rapid phase oscillations due to ψ_l will average to zero, within the range of parameters considered here, in any measuring process. From (6.31) we obtain the following representation for $J_0(\tau,\xi)$:

$$J_0(\tau,\xi) = e^{\alpha(\tau/2)-\alpha\xi}\pi\int_{-\infty}^{\infty}e^{-\alpha\tau(t^2+1/4)}\frac{t\sinh\pi t}{\cosh^2\pi t}P_{-1/2+it}(\cosh\theta_g) \times\left\{\cosh\theta_l\cos\alpha t(\tau-2\xi)P_{-1/2+it}(\cosh\theta_l) - \frac{\sin\alpha t(\tau-2\xi)}{2t}[(\tfrac{1}{2}+it)P_{-3/2-it}(\cosh\theta_l) + (\tfrac{1}{2}-it)P_{-3/2+it}(\cosh\theta_l]\right\}dt. \quad (6.32)$$

In Figs. 2-4 we plot $J_0(\tau, \xi)$ as a function of ξ, $-\tau/2 \le \xi \le \tau/2$ for various values of $\tau \ge 0$, $\theta_g \ge 0$, $\theta_l \ge 0$. The graphs were obtained by evaluating (6.32) numerically.

The above theorem is somewhat surprising and one is led to inquire if it could have been anticipated without actually performing the computations. This is not an easy task however, because a great deal of simplification and decoupling occurs in the asymptotic limit. Furthermore, within the context of the asymptotic limit, the result appears as a somewhat peculiar property of conditional expectations of certain functionals of, essentially, Brownian motion on the hyperbolic disc.

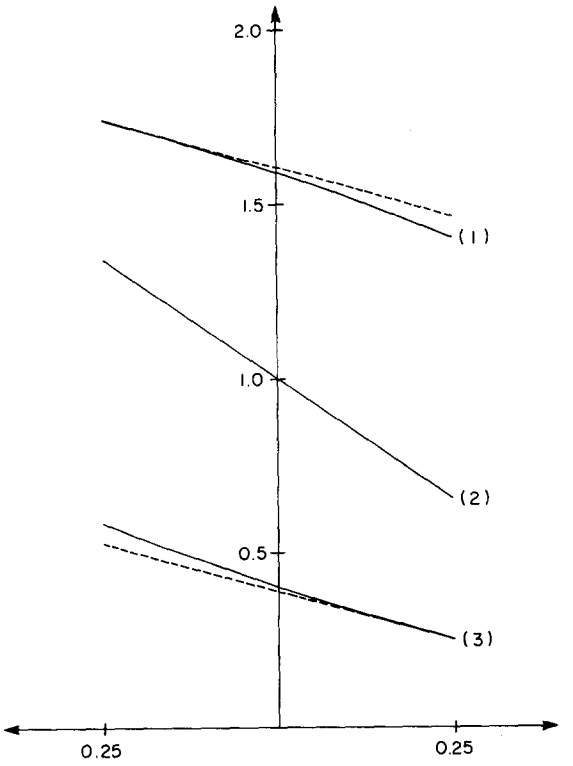

FIG. 2. Here we plot J_0 (solid lines) and J_s (broken lines) versus $\alpha\xi$, $-\alpha\tau/2 \le \alpha\xi \le \alpha\tau/2$, for $\alpha\tau = 0.5$. The curves labeled by (1), (2), (3) correspond to $\theta_g = 0$ and $\theta_l = 2.4$, $\theta_g = \theta_l = 0$, $\theta_g = 2.4$ and $\theta_l = 0$, respectively. In this figure the solid and broken lines coalesce when $\theta_g = \theta_l = 0$.

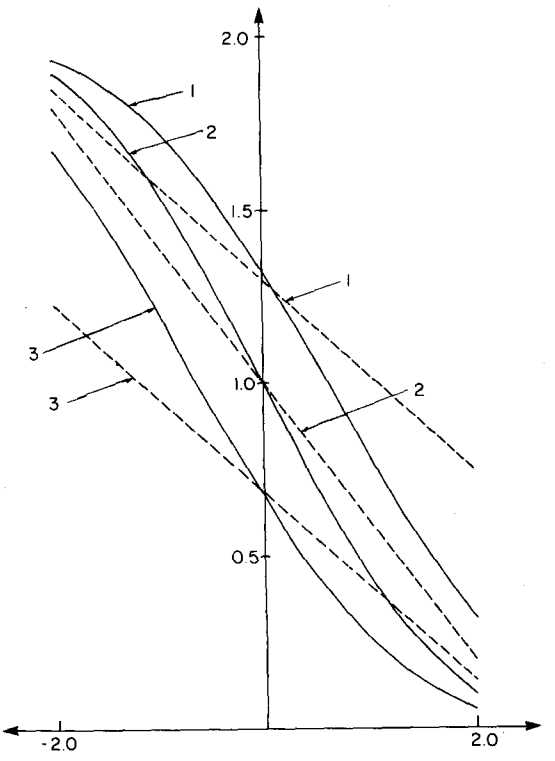

FIG. 3. For $\alpha\tau = 4$ (see Fig. 2).

7. TRANSMISSION COEFFICIENTS

We shall compute here the expectation of $P_{\max}^{-1}(|A|^2 - |B|^2)$ in the asymptotic limit of Sec. 4. It can be verified that this quantity is independent of x, $0 \le x \le l$. As noted in (2.18) it represents the power flux through the line and we call it the power transmission coefficient. Thus we set

$$PT(\tau) = P_{\max}^{-1} \lim_{\epsilon \to 0} E\{|A(\tau/\epsilon^2, \tau/\epsilon^2)|^2 - |B(\tau/\epsilon^2, \tau/\epsilon^2)|^2\}, \tag{7.1}$$

where we have chosen to let $x = l$. From (5.23), (5.19), and (7.1), we obtain

$$PT(\tau) = \int_1^\infty \int_0^{2\pi} g(u, v_l, \phi; \psi_l) P(\tau; u, \phi; u_g, \phi_g) du d\phi, \quad \tau \ge 0. \tag{7.2}$$

Here P is given by (5.21), $u = \cosh\theta$, $u_g = \cosh\theta_g$, $v_l = \cosh\theta_l$ and

$$g(u, v, \phi, \psi) = 2[1 + uv + \sqrt{u^2 - 1}\sqrt{v^2 - 1}\cos(\phi + \psi)]^{-1}. \tag{7.3}$$

It is not necessary to perform any computations in evaluating (7.2) for $PT(\tau)$ because we can use $J(\tau, \xi)$ of the previous section as follows From (2.7) we notice that at $x = l$; we have

$$|A|^2 + |B|^2 = \left(\frac{1 + |\Gamma_l|^2}{1 - |\Gamma_l|^2}\right)(|A|^2 - |B|^2). \tag{7.4}$$

Thus, from (5.3), (6.1), and (7.1)

$$PT(\tau) = \operatorname{sech}\theta_l J(\tau, \tau/2). \tag{7.5}$$

Setting $\xi = \alpha/2$ in (6.31) yields the desired result:

$$PT(\tau) = \sum_{m=-\infty}^{\infty} e^{im(\phi_g + \psi_l) - \kappa_m \tau \pi} \int_{-\infty}^{\infty} e^{-\alpha\tau(t^2 + 1/4)} \frac{t \sinh \pi t}{\cosh^2 \pi t} \times \frac{\Gamma(\frac{1}{2} - |m| + it)}{\Gamma(\frac{1}{2} + |m| + it)} \cdot P_{-1/2+it}^{|m|}(\cosh\theta_g) \times P_{-1/2+it}^{|m|}(\cosh\theta_l) dt. \tag{7.6}$$

Here κ_m and α are defined by (6.5) and (4.12), respectively. Note that (7.14) is symmetric in the load and generator parameters:

$$PT(\tau; \theta_g, \phi_g; \theta_l, \psi_l) = PT(\tau; \theta_l, \psi_l; \theta_g, \phi_g). \tag{7.7}$$

In order to compare (7.6) with the results of J. A. Morrison[15] we must identify the load and generator parameters with those of problem (2.14). This amounts to expressing (2.16) and (2.17) in polar coordinates (5.3) and using (5.14). A simple calculation yields

$$\cosh\theta_g = \tfrac{1}{2}(n_1 + 1/n_1), \qquad \phi_g = \pi H(n_1 - 1), \tag{7.8}$$

$$\cosh\theta_l = \tfrac{1}{2}(n_2 + 1/n_2), \qquad \psi_l = 2ikl + \pi H(n_2 - 1) + \pi, \tag{7.9}$$

$$P_{\max} = n_1. \tag{7.10}$$

Here $H(x)$ denotes the Heaviside unit step function. Upon using (7.8)-(7.10) in (7.6) we recover Morrison's formula[15] (4.17) by employing the identity[20]

$$\Gamma(\tfrac{1}{2} - |m| - it)\Gamma(\tfrac{1}{2} + |m| + it) = (-1)^m \pi/\cosh \pi t, \tag{7.11}$$

and noting that his β_0 corresponds to $-k$ here.

When the line is matched to the generator and the load then $\theta_g = \theta_l = 0$ and (7.6) simplifies to

$$PT\Big|_{\substack{\theta_g=0\\ \theta_l=0}} = 2\pi \int_0^\infty e^{-\alpha\tau(t^2+1/4)} \frac{t \sinh \pi t}{\cosh^2 \pi t} dt, \qquad \tau \geq 0. \tag{7.12}$$

Using (7.5), (6.28), and (6.29) we find another representation of the result (7.12):

$$\begin{aligned} PT(\tau)\Big|_{\substack{\theta_g=0\\ \theta_l=0}} &= \sqrt{\alpha/\pi\tau} \int_{-\infty}^{\infty} e^{-\alpha\tau(\tau/2-\eta)^2} \\ &\quad \times (1 - \tanh \alpha\eta - \alpha\eta/\cosh^2 \alpha\eta) d\eta \\ &= \frac{4e^{-\alpha\tau/4}}{\sqrt{\pi}} \int_0^\infty \frac{\eta^2 e^{-\eta^2} d\eta}{\cosh(\eta\sqrt{\alpha\tau})}. \end{aligned} \tag{7.13}$$

Formulas (7.12) and (7.13) have been obtained previously by a variety of methods.[24,25,26]

8. COMPARISON WITH RADIATIVE TRANSPORT THEORY

Radiative transport theory is a phenomenological theory that considers the transport of radiation from one region of an inhomogeneous medium to another as an incoherent scattering phenomenon disregarding the wave nature of the transfer process. We shall describe briefly this theory in connection with problem (2.10)-(2.13) first when $n_1 = n_2 = 1$ and then in the general case.

Let $I^+(t, \tau, \sigma)$, $t \geq 0$, $0 \leq \sigma \leq \tau$, represent the intensity of radiation at time t and location σ propagating in the positive σ direction through an inhomogeneous medium occupying the interval $[0, \tau]$. Let $I^-(t, \tau, \sigma)$ represent the intensity propagating in the negative σ direction. Elementary physical arguments[5] lead to the following conservation equations for $I^\pm$:

$$\begin{aligned} &\frac{1}{v}\frac{\partial I^+}{\partial t} + \frac{\partial I^+}{\partial \sigma} = -\alpha I^+ + \beta I^-, \\ &\frac{1}{v}\frac{\partial I^-}{\partial t} - \frac{\partial I^-}{\partial \sigma} = -\alpha I^- + \beta I^+, \qquad 0 \leq \sigma \leq \tau, \qquad t \geq 0, \end{aligned} \tag{8.1}$$

$$I^\pm(0, \tau, \sigma) = I_0^\pm(\sigma), \tag{8.2}$$

$$I^+(t, \tau, 0) = 1, \qquad I^-(t, \tau, \tau) = 0. \tag{8.3}$$

Here v denotes the transport velocity, α and β are transport coefficients characteristic of the scattering, absorptive and emittive properties of the medium and (8.3) has been chosen so that radiation of unit intensity is incident on the medium from the left. In the steady state regime and for a conservative medium we set the time derivatives equal to zero in (8.1) and $\alpha = \beta$. Thus $I^\pm(\tau, \sigma)$ satisfy the equations

$$\begin{aligned} &\frac{d}{d\sigma} I^+ = -\alpha(I^+ - I^-), \\ &-\frac{d}{d\sigma} I^- = \alpha(I^+ - I^-), \qquad 0 \leq \sigma \leq \tau, \end{aligned} \tag{8.4}$$

$$I^+(\tau, 0) = 1, \qquad I^-(\tau, \tau) = 0. \tag{8.5}$$

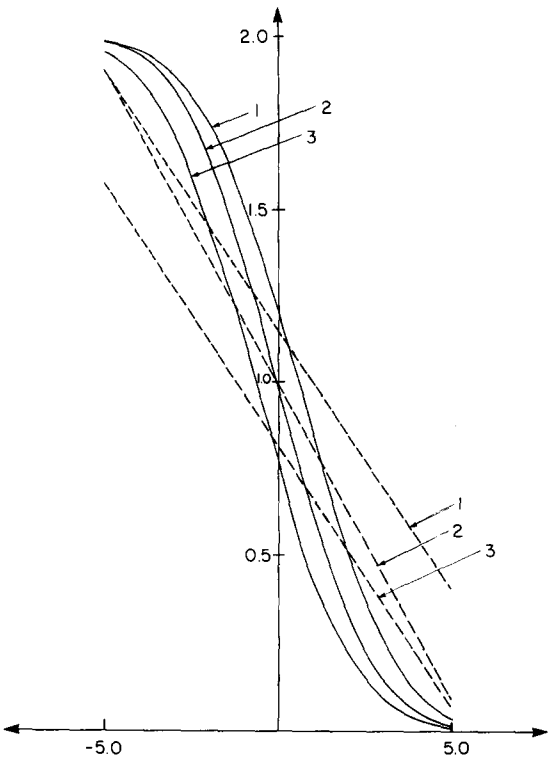

FIG. 4. For $\alpha\tau = 10$ (see Fig. 2).

The quantity $I^+ + I^-$ is the total radiation and $I^+ - I^-$ is the flux of radiation. The latter depends on τ only. Equations (8.4), (8.5) are elementary and their solution is

$$I^+(\tau, \sigma) = \frac{1 + \alpha(\tau - \sigma)}{1 + \alpha\tau}, \qquad I^-(\tau, \sigma) = \frac{\alpha(\tau - \sigma)}{1 + \alpha\tau}, \qquad 0 \leq \sigma \leq \tau. \tag{8.6}$$

The above theory is entirely phenomenological and it was first employed by Schuster;[5] see also Ref. 10, 27. A general treatment of radiative transport theory can be found in Ref. 6.

The question that concerns us here is the following. What is the relation, if any, between (8.4), (8.5) and the stochastic boundary value problem (2.6), (2.7)? We assume here that $E_g = 1$, $\Gamma_g = \Gamma_l = 0$ in (2.7). Several investigators[7,8,9] have given heuristic arguments indicating that $I^+(\tau, \sigma)$ and $I^-(\tau, \sigma)$ should be $\lim_{\epsilon\to 0} E\{|A(\tau/\epsilon^2, \sigma/\epsilon^2)|^2\}$ and $\lim_{\epsilon\to 0} E\{|B(\tau/\epsilon^2, \sigma/\epsilon^2)|^2\}$, respectively, under more or less the same conditions as stated in Sec. 4 and with α in (8.4) given by (4.12). This would be a very satisfactory answer to our question, if it were correct, because (8.4) and (8.5) are very simple equations. Unfortunately, it cannot be correct without further restrictions since it does not agree with the results of Secs. 6 and 7 which follow from a rigorous mathematical theory.

In order to compare transport theory to the general mismatched case we must change the boundary condition in (8.5). If we accept the correspondence between A, B, and $I^\pm$ discussed above then, in view of (2.7), (8.5) should be

$$\begin{aligned} I^+(\tau, 0) &= |E_g|^2 + |\Gamma_g|^2 I^-(\tau, 0), \\ I^-(\tau, \tau) &= |\Gamma_l|^2 I^+(\tau, \tau). \end{aligned} \tag{8.7}$$

Solving (8.4) and (8.7), we obtain

$$J_s(\tau,\xi) = P_{\max}^{-1}[I^+(\tau,\tau/2+\xi) + I^-(\tau,\tau/2+\xi)]$$
$$= 1 - \left(\frac{\frac{1}{2}(\cosh\theta_g - \cosh\theta_l) + 2\alpha\xi}{\frac{1}{2}(\cosh\theta_g + \cosh\theta_l) + \alpha\tau}\right),$$
$$-\tau/2 \le \xi \le \tau/2, \tag{8.8}$$

$$PT_s(\tau) = P_{\max}^{-1}[I^+(\tau,\tau/2+\xi) - I^-(\tau,\tau/2+\xi)]$$
$$= \frac{1}{\frac{1}{2}(\cosh\theta_g + \cosh\theta_l) + \alpha\tau}. \tag{8.9}$$

Here we have used the subscript s (Schuster) to denote quantities obtained from transport theory, $P_{\max}$ is given by (5.14) and we have employed polar coordinates as in (5.3). When $\cosh\theta_g = \cosh\theta_l = 1$ the results (8.8), (8.9) reduce to the matched case (8.6).

Let us now compare (8.8) and (8.9) with the results obtained by the stochastic theory. Specifically, we compare $J_s(\tau,\xi)$ with $J_0(\tau,\xi)$ given by (6.32) and (8.9) with $PT_0(\tau)$ which is the $m = 0$ term in (7.6):

$$PT_0(\tau) = \pi\int_{-\infty}^{\infty} e^{-\alpha\tau(t^2+1/4)}\frac{t\sinh\pi t}{\cosh^2\pi t}P_{-1/2+it}(\cosh\theta_g)\,P_{-1/2+it}(\cosh\theta_l)dt. \tag{8.10}$$

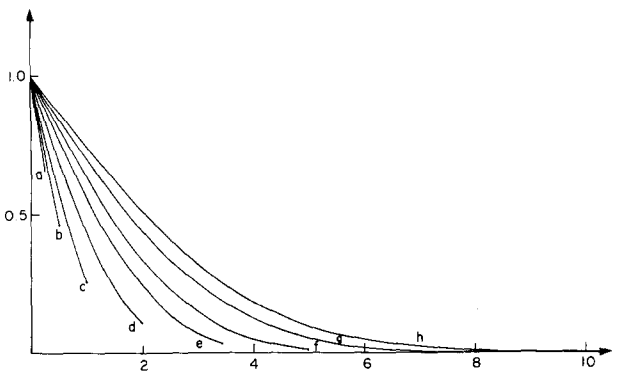

FIG. 5. Here we plot J_0 versus $\alpha\xi$, $0 \le \alpha\xi \le \alpha\tau/2$ for $\theta_g = \theta_l = 0$ and $\alpha\tau = .5$ (a), $\alpha\tau = 1$ (b), $\alpha\tau = 2$ (c), $\alpha\tau = 4$ (d), $\alpha\tau = 7$ (e), $\alpha\tau = 10$ (f), $\alpha\tau = 15$ (g), $\alpha\tau = 20$ (h).

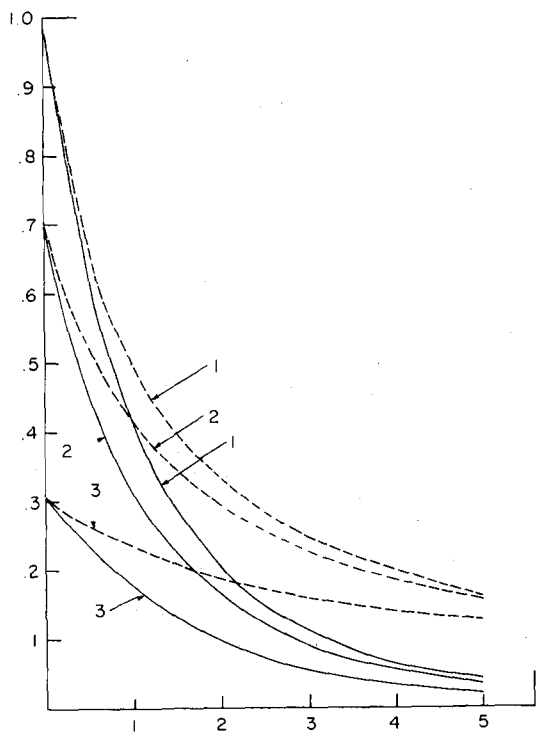

FIG. 6. Here we plot PT_0 (solid lines) and PT_s (broken lines) versus $\alpha\tau$, $0 \le \alpha\tau \le 5$. The curves labeled (1), (2), (3) correspond to $\theta_g = \theta_l = 0$, $\theta_g = 1.2$ and $\theta_l = 0$, $\theta_g = 2.4$ and $\theta_l = 0$, respectively.

The comparison of corresponding formulas is best done by examining the graphs shown in Figs. 2-6. However, for small $\alpha\tau$ we can expand both $PT_s(\tau)$ and $PT_0(\tau)$ in powers of $\alpha\tau$ and compare the first few terms:

$$PT_s(\tau) = \frac{2}{\cosh\theta_g + \cosh\theta_l} - \frac{4\alpha\tau}{(\cosh\theta_g + \cosh\theta_l)^2} + \frac{8(\alpha\tau)^2}{(\cosh\theta_g + \cosh\theta_l)^3} + \cdots \tag{8.11}$$

$$PT_0(\tau) = \frac{2}{\cosh\theta_g + \cosh\theta_l} - \frac{4(1+\cosh\theta_g\cosh\theta_l)\alpha\tau}{(\cosh\theta_g + \cosh\theta_l)^3}$$
$$+ \{4(\alpha\tau)^2[6 - (3+\cosh\theta_l\cosh\theta_g)(\cosh^2\theta_g + \cosh^2\theta_l)$$
$$+ 2\cosh\theta_l\cosh\theta_g(3 + 2\cosh\theta_l\cosh\theta_g)]\}$$
$$\times(\cosh\theta_g + \cosh\theta_l)^{-5} + \cdots. \tag{8.12}$$

From (8.11) and (8.12) it follows that in the general case PT_s and PT_0 disagree even to first order in $\alpha\tau$. However, in the matched case, $\cosh\theta_g = \cosh\theta_l = 1$, PT_0 and PT_s agree to order $(\alpha\tau)^2$, but disagree in order $(\alpha\tau)^3$. From the figures we see that transport theory agrees fairly well with the stochastic theory in the matched case when $\alpha\tau$ is small. When $\alpha\tau$ is large or when there is impedance mismatch then we have fairly significant discrepancies.

It appears that in the asymptotic limit of Sec. 4 some phase information remains in $J_0(\tau,\xi)$ and $PT_0(\tau)$ and this leads to quantitative disagreement with the purely incoherent transport theory. On the other hand transport theory is much simpler. We may conclude however, that transport theory cannot be related systematically to stochastic wave equations in the simple manner suggested so far. This conclusion is supported by a recent analysis,[28] comparing the predictions of the two theories for power transmission in the matched case with computer-simulated results.

9. PROPAGATION OF PULSES

Up to now we have concerned ourselves exclusively with time harmonic dependence of the fields. The methods employed in a previous section can be used, however, to analyze problems with more general time dependence. In this section we examine the pulse problem in general and compute in particular the spreading of a Gaussian modulated pulse due to the fluctuations.

Let $\mathcal{E}_g(t)$ represent the generator voltage as a function of time and denote by $\mathfrak{A}(l,x;t)$ and $\mathfrak{B}(l,x,t)$ the time dependent incident and reflected waves at location x, $0 \le x \le l$, for a line of length $l \ge 0$ and at time $t \ge 0$. We introduce Fourier transforms as follows

$$e_g(\omega) = \frac{1}{\sqrt{2\pi}}\int_{-\infty}^{\infty} e^{i\omega t}\mathcal{E}_g(t)dt, \tag{9.1}$$

$$e^{i\omega x/c}A(l,x;\omega) = \frac{1}{\sqrt{2\pi}}\int_{-\infty}^{\infty} e^{i\omega t}\mathfrak{A}(l,x;t)dt \tag{9.2}$$

$$e^{-i\omega x/c}B(l,x;\omega) = \frac{1}{\sqrt{2\pi}}\int_{-\infty}^{\infty} e^{i\omega t}\mathfrak{B}(l,x;t)dt. \tag{9.3}$$

We shall assume that $A(l,x;\omega)$ and $B(l,x;\omega)$ satisfy the boundary value problem (2.6), (2.7) where $k=\omega/c$ as in (2.4) and $e_g(\omega)$ in (2.8) is given by (9.1). Note also that, in general, $Z_g = Z_g(\omega)$ and $Z_l = Z_l(\omega)$ so that Γ_g and Γ_l in (2.9) are functions of ω. Similarly, the statistical characteristics of $\mu(x)$ in (2.8) may depend on ω so we will write $\mu(x;\omega)$ or $\mu(x;k)$.

The time dependent amplitudes $\mathcal{A}(l,x;t)$ and $\mathcal{B}(l,x;t)$ are obtained by using the inverse Fourier transform

$$\mathcal{A}(l,x;t) = \frac{1}{\sqrt{2\pi}}\int_{-\infty}^{\infty} e^{-i\omega(t-x/c)}A(l,x;\omega)d\omega, \tag{9.4}$$

$$\mathcal{B}(l,x;t) = \frac{1}{\sqrt{2\pi}}\int_{-\infty}^{\infty} e^{-i\omega(t+x/c)}B(l,x;\omega)d\omega. \tag{9.5}$$

The quantities of interest to us are the expected values of the time dependent incident and reflected powers. Before introducing these quantities, however, it is convenient to change our notation and express all quantities and integration variables in terms of $k=\omega/c$ rather than ω [cf. (2.14)]. Thus, we have the representations

$$E\{|\mathcal{A}(l,x;t)|^2\} = \frac{c^2}{2\pi}\int_{-\infty}^{\infty}\int_{-\infty}^{\infty} e^{-i(k-k')(ct-x)}E\{A(l,x;k)\overline{A}(l,x;k')\}dkdk' \tag{9.6}$$

$$E\{|\mathcal{B}(l,x;t)|^2\} = \frac{c^2}{2\pi}\int_{-\infty}^{\infty}\int_{-\infty}^{\infty} e^{-i(k-k')(ct+x)}E\{B(l,x;k)\overline{B}(l,x;k')\}dkdk' \tag{9.7}$$

From (9.6) and (9.7) it is apparent that the analysis of the pulse problem rests on knowledge of the joint statistics of the solution $A(l,x;k)$ and $B(l,x;k)$ of (2.6), (2.7) at two wave numbers k and k'.

In order to employ the limit theorem of section 4 for the joint statistics at two wave numbers we shall assume that the following conditions hold:

$$\text{(i)}\quad P = \int_{-\infty}^{\infty} P_{\max}(k)dk < \infty, \qquad P_{\max}(k) = \frac{|e_g(k)|^2}{4\,\mathrm{Re}(Z_g(k))}, \tag{9.8}$$

$$\text{(ii)}\quad P_{\max}(k) = 0, \qquad |k| > \Omega. \tag{9.9}$$

The first assumption asserts that the total power of the pulse is finite and the second asserts that the pulse is bandlimited. Let $\zeta > 0$ be fixed and define $\mathfrak{D}_\zeta$ and $\overline{\mathfrak{D}}_\zeta$ by

$$\mathfrak{D}_\zeta = \{(k,k')\big||k-k'| \le \zeta\} \cup \{(k,k')\big||k+k'| \le \zeta\},$$
$$\overline{\mathfrak{D}}_\zeta = \text{complement of } \mathfrak{D}_\zeta. \tag{9.10}$$

From the definition (5.14) of $P_{\max}(k)$ it follows that

$$|A(l,x;k)| \le P_{\max}^{1/2}(k), \qquad |B(l,x;k)| \le P_{\max}^{1/2}(k), \tag{9.11}$$

since $|A|^2$ and $|B|^2$ are the incident and reflected powers, respectively. From (9.8), (9.9), and (9.11) we conclude that we may replace the domain of integration in (9.6) and (9.7) by $\overline{\mathfrak{D}}_\zeta$ with an error which does not exceed $(4c^2P/\pi)\zeta$. Thus, for the purposes of the limit theorem, we shall assume that k and k' are distinct independently of $\epsilon \ge 0$ and, from (9.9), k and k' are bounded in absolute value.

We turn next to the computation of $E\{A(l,x;k)\overline{A}(l,x,k')\}$ and $E\{B(l,x;k)\overline{B}(l,x;k')\}$ in the asymptotic limit of Sec. 4. From (3.9) and (3.10) it follows that we must find the joint statistics of $Y_1(x,0;k)$, $Y_1(x,0;k')$ satisfying (3.6) with $m(x;k)$ and $m(x;k')$, respectively, and $Y_2(l,x;k)$, $Y_2(l,x;k')$ satisfying (3.7) with $m(x;k)$ and $m(x;k')$, respectively. Let Y_{11} be defined by

$$Y_{11}(x,0;k,k') = Y_1(x,0;k) \oplus Y_1(x,0;k'). \tag{9.12}$$

Here $\oplus$ denotes direct sum. From (3.6) it follows that

$$\frac{d}{dx}Y_{11}(x,0;k,k') = \epsilon\hat{m}(x;k,k')Y_{11}(x,0;k,k'), \qquad x \ge 0,$$
$$Y_{11}(0,0;k,k') = Y_g(k) \oplus Y_g(k') \equiv Y_g \oplus Y_g', \tag{9.13}$$
$$\hat{m}(x;k,k') = m(x;k) \oplus m(x;k').$$

Similarly, we define $Y_{22}(l,x;k,k')$ as the direct sum of $Y_2(l,x;k)$ and $Y_2(l,x;k')$ and obtain the equation it satisfies from (3.7). Now we apply the analysis of Sec. 4 to the direct sum processes $Y_{11}(x,0;k,k')$ and $Y_{22}(l,x;k,k')$. First, however, we must introduce some notation.

Let 0 denote the 2×2 zero matrix and define

$$\eta_i^{(1)} = \eta_i \oplus 0, \qquad \eta_i^{(2)} = 0 \oplus \eta_i, \qquad i = 1,2,3, \tag{9.14}$$

where η_i are given by (4.1). Then, $\hat{m}(x;k,k')$ may be expressed as

$$\hat{m}(x;k,k') = \sum_{j=1}^{3} m_j(x;k)\eta_j^{(1)} + \sum_{j=1}^{3} m_j(x,k')\eta_j^{(2)}. \tag{9.15}$$

Here we have employed the notation introduced in (4.3) and we have shown the dependence on k and k' explicitly. Let $Y_{11}^{(\epsilon)}(\sigma;k,k')$ be defined by

$$Y_{11}^{(\epsilon)}(\sigma;k,k') = Y_{11}(\sigma/\epsilon^2,0;k,k'), \qquad \sigma = \epsilon^2 x. \tag{9.16}$$

We are ready now to apply the limit theorem of Sec. 4 to the direct sum process $Y_{11}^{(\epsilon)}(\sigma;k,k')$.

The application of the limit theorem is straightforward because we have arranged that k and k' be distinct. Thus, we find that if f is a bounded smooth function of $Y_{11}^{(\epsilon)}$ then $U^{(\epsilon)}(\sigma, Y_g \oplus Y_g') = E\{f(Y_{11}^{(\epsilon)}(\sigma))\}$ converges, as $\epsilon \to 0$ and σ remains fixed, to $U^{(0)}(\sigma, Y_g \oplus Y_g')$ where

$$\frac{\partial}{\partial\sigma}U^{(0)} = (V + V' + W)U^{(0)}, \qquad \sigma > 0,$$
$$U^{(0)}(0) = f(Y_g \oplus Y_g'). \tag{9.17}$$

Here V, V', and W are given by

$$V = \alpha(k)(D_{\eta_2^{(1)}}D_{\eta_2^{(1)}} + D_{\eta_3^{(1)}}D_{\eta_3^{(1)}}) + \gamma(k)D_{\eta_1^{(1)}}D_{\eta_1^{(1)}} - \beta(k)D_{\eta_1^{(1)}}, \tag{9.18}$$

$$V' = \alpha(k')(D_{\eta_2^{(2)}}D_{\eta_2^{(2)}} + D_{\eta_3^{(2)}}D_{\eta_3^{(2)}}) + \gamma(k')D_{\eta_1^{(2)}}D_{\eta_1^{(2)}} - \beta(k')D_{\eta_1^{(2)}} \tag{9.19}$$

$$W = 2\delta(k,k')D_{\eta_1^{(1)}}D_{\eta_1^{(2)}}, \tag{9.20}$$

$$\alpha(k) = \frac{k^2}{2}\int_0^\infty R(s;k,k)\cos 2ks\,ds,$$
$$\beta(k) = \frac{k^2}{2}\int_0^\infty R(s;k,k)\sin 2ks\,ds,$$
$$\gamma(k) = k^2\int_0^\infty R(s;k,k)ds,$$
$$\delta(k,k') = \frac{kk'}{2}\int_0^\infty [R(s;k,k') + R(s;k',k)]ds,$$
$$R(s;k,k') = E\{\mu(x;k)\mu(x+s;k')\}. \tag{9.21}$$

Note that W is the interaction operator which couples the statistics of the two components of the direct sum process.

As in Sec. 5 we introduce polar coordinates in order to facilitate application of the limit theorem. Instead of (5.1), however, it is more convenient to use

$$Y = \begin{pmatrix} a & b \\ \bar{b} & \bar{a} \end{pmatrix} = \begin{pmatrix} e^{i\xi}\sqrt{u+1}/\sqrt{2} & e^{i\eta}\sqrt{u-1}/\sqrt{2} \\ e^{-i\eta}\sqrt{u-1}/\sqrt{2} & e^{-i\xi}\sqrt{u+1}/\sqrt{2} \end{pmatrix}, \tag{9.22}$$

$$0 \le \xi < 2\pi, \quad 0 \le \eta < 2\pi, \quad u \ge 1.$$

With this parametrization V of (9.18) and (5.11) takes the form

$$V = \alpha(k)\left[\frac{\partial}{\partial u}\left((u^2-1)\frac{\partial}{\partial u}\right) + \frac{1}{4}\left(\frac{u-1}{u+1}\right)\frac{\partial^2}{\partial \xi^2} + \frac{1}{4}\left(\frac{u+1}{u-1}\right) \times \frac{\partial^2}{\partial \eta^2} + \frac{1}{2}\frac{\partial^2}{\partial \xi \partial \eta}\right] + \frac{\gamma(k)}{4}\left(\frac{\partial}{\partial \xi} + \frac{\partial}{\partial \eta}\right)^2 - \frac{\beta(k)}{2}\left(\frac{\partial}{\partial \xi} + \frac{\partial}{\partial \eta}\right). \tag{9.23}$$

Similarly, V' of (9.19) coincides with (9.23) except α, β, and γ are evaluated at k' and (u, ξ, η) is replaced by (u', ξ', η') which parametrize the second component of the direct sum process. The interaction operator W is given by

$$W = \frac{\delta}{2}\left(\frac{\partial}{\partial \xi} + \frac{\partial}{\partial \eta}\right)\left(\frac{\partial}{\partial \xi'} + \frac{\partial}{\partial \eta'}\right). \tag{9.24}$$

The parametrization (9.22) is more convenient here because, as we will see below, the quantities of interest depend upon all three parameters of Y and they do not simplify as in (5.12), (5.13). Nevertheless other simplifications occur and they are best exploited by using (9.22).

From (3.9) and (3.10) we obtain the expression

$$A(l,x;k)\bar{A}(l,x;k') = E_g\bar{E}'_g\bar{a}_g a'_g \frac{\bar{a}_2 a'_2}{(\bar{b}_2 b_1 + \bar{a}_2\bar{a}_1)(b'_2\bar{b}'_1 + a'_2 a'_1)} \tag{9.25}$$

$$B(l,x;k)\bar{B}(l,x;k') = E_g\bar{E}'_g\bar{a}_g a'_g \frac{\bar{b}_2 b'_2}{(\bar{b}_2 b_1 + \bar{a}_2\bar{a}_1)(b'_2\bar{b}'_1 + a'_2 a'_1)}. \tag{9.26}$$

Here the primes on the variables indicate that they correspond to k' and the subscripts one and two refer to the direct sum processes $Y_{11}(x, 0; k, k')$ and $Y_{22}(l, x; k; k')$, respectively. The denominators in (9.25) and (9.26) can be expanded into absolutely convergent geometric series. On using, in addition, the parametrization (9.22) we find that

$$A(l,x;k)\bar{A}(l,x;k') = E_g\bar{E}'_g\bar{a}_g a'_g 2 \cdot \sum_{n,m=0}^{\infty}(-1)^{m+n} G^{(1)}_{mn} G^{(2)}_{mn}, \tag{9.27}$$

$$B(l,x;k)\bar{B}(l,x;k') = E_g\bar{E}'_g\bar{a}_g a'_g 2 \cdot \sum_{n,m=0}^{\infty}(-1)^{m+n} G^{(1)}_{mn} G^{(2)}_{(m+1)(n+1)}, \tag{9.28}$$

$$G^{(1)}_{mn}(u_1, \xi_1, \eta_1, u'_1, \xi'_1, \eta'_1) = e^{i[m\eta_1 + (m+1)\xi_1 - n\eta'_1 - (n+1)\xi'_1]} \times \left[\frac{(u_1-1)^{m/2}(u'_1-1)^{n/2}}{(u_1+1)^{(m+1)/2}(u'_1+1)^{(n+1)/2}}\right], \tag{9.29}$$

$$G^{(2)}_{mn}(u_2, \xi_2, \eta_2, u'_2, \xi'_2, \eta'_2) = e^{i[m\xi_2 - m\eta_2 - n\xi'_2 + n\eta'_2]}\left[\frac{(u_2-1)^{m/2}(u'_2-1)^{n/2}}{(u_2+1)^{m/2}(u'_2+1)^{n/2}}\right]. \tag{9.30}$$

Since $G^{(1)}_{mn}$ and $G^{(2)}_{mn}$ are bounded continuous functions of Y_{11} and Y_{22}, respectively, the independent increments property applied to the direct sum processes yields

$$\lim_{\epsilon\to 0} E\{A(\tau/\epsilon^2, \sigma/\epsilon^2; k)\bar{A}(\tau/\epsilon^2, \sigma/\epsilon^2; k')\} = E_g\bar{E}'_g\bar{a}_g a'_g 2 \cdot \sum_{n,m=0}^{\infty}(-1)^{m+n}\hat{G}^{(1)}_{mn}(\sigma)\hat{G}^{(2)}_{mn}(\tau-\sigma), \tag{9.31}$$

$$\lim_{\epsilon\to 0} E\{B(\tau/\epsilon^2, \sigma/\epsilon^2; k)\bar{B}(\tau/\epsilon^2, \sigma/\epsilon^2; k')\} = E_g\bar{E}'_g\bar{a}_g a'_g 2 \cdot \sum_{n,m=0}^{\infty}(-1)^{m+n}\hat{G}^{(1)}_{mn}(\sigma)\hat{G}^{(2)}_{(m+1)(n+1)}(\tau-\sigma) \tag{9.32}$$

Here $\hat{G}^{(1)}_{mn}(\sigma)$ and $\hat{G}^{(2)}_{mn}(\sigma)$ are functions of the generator and load parameters, respectively, and they satisfy the initial value problems

$$\frac{\partial}{\partial\sigma}\hat{G}^{(1)}_{mn} = (V + V' + W)\hat{G}^{(1)}_{mn}, \quad \sigma > 0, \quad \hat{G}^{(1)}_{mn}(0) = G^{(1)}_{mn} \tag{9.33}$$

$$\frac{\partial}{\partial\sigma}\hat{G}^{(2)}_{mn} = (V + V' + W)\hat{G}^{(2)}_{mn}, \quad \sigma > 0, \quad \hat{G}^{(2)}(0) = G^{(2)}_{mn}. \tag{9.34}$$

The solution of (9.33) and (9.34) is obtained easily after observing that the functions

$$Q_{MN}(u, \xi, \eta) = (u-1)^{M/2}(u+1)^{-N/2}e^{i[\kappa_1 M\eta + \kappa_2 N\xi]}, \quad M, N \ge 0, \quad \kappa_1, \kappa_2 = \pm 1. \tag{9.35}$$

and formal eigenfunctions of V in (9.23). The corresponding eigenvalues are

$$\Lambda_{MN} = \frac{\alpha}{2}(M - N - MN(1 + \kappa_1\kappa_2)) - \frac{\gamma}{4}(M + \kappa_1\kappa_2 N)^2 + \frac{i\beta}{2}(\kappa_1 M + \kappa_2 N). \tag{9.36}$$

From (9.29), (9.30), and (9.35) it follows that both $G^{(1)}_{mn}$ and $G^{(2)}_{mn}$ are formal eigenfunctions of $V + V' + W$ in (9.17) with eigenvalues $\lambda^{(1)}_{mn}$ and $\lambda^{(2)}_{mn}$ given by

$$\begin{aligned}\lambda^{(1)}_{mn} = &-\alpha(k)(m^2 + m + \tfrac{1}{2}) - \gamma(k)(m + \tfrac{1}{2})^2 \\ &- \alpha(k')(n^2 + n + \tfrac{1}{2}) - \gamma(k')(n + \tfrac{1}{2})^2 \\ &+ 2\delta(m + \tfrac{1}{2})(n + \tfrac{1}{2}) + i[-\beta(k)(m + \tfrac{1}{2}) \\ &+ \beta(k')(n + \tfrac{1}{2})],\end{aligned} \tag{9.37}$$

$$\lambda^{(2)}_{mn} = 0. \tag{9.38}$$

Thus

$$\hat{G}^{(1)}_{mn} = e^{\lambda^{(1)}_{mn}\sigma}G^{(1)}_{mn}, \quad \hat{G}^{(2)}_{mn} = G^{(2)}_{mn}. \tag{9.39}$$

The fact that $G^{(2)}_{mn}$ is independent of σ, a consequence of (9.38), is remarkable. It implies that the limits (9.31) and (9.32) are independent of τ and, after some rearrangement, are given by

$$\lim_{\epsilon\to 0} E\{A(\tau/\epsilon^2, \sigma/\epsilon^2; k)\bar{A}(\tau/\epsilon^2, \sigma/\epsilon^2; k')\} = E_g\bar{E}'_g \cdot \sum_{n,m=0}^{\infty} e^{\lambda^{(1)}_{mn}\sigma}[\Gamma_g(k)\Gamma_l(k)]^m[\bar{\Gamma}_g(k')\bar{\Gamma}_l(k')]^n, \tag{9.40}$$

$$\lim_{\epsilon\to 0} E\{B(\tau/\epsilon^2, \sigma/\epsilon^2; k)\bar{B}(\tau/\epsilon^2, \sigma/\epsilon^2; k')\} = \Gamma_l(k)\bar{\Gamma}_l(k')E_g\bar{E}'_g \cdot \sum_{n,m=0}^{\infty} e^{\lambda^{(1)}_{mn}\sigma}[\Gamma_g(k)\Gamma_l(k)]^m \times [\bar{\Gamma}_g(k')\bar{\Gamma}_l(k')]^n. \tag{9.41}$$

Here $\Gamma_g(k)$ and $\Gamma_l(k)$ are as defined in (5.3).

The results (9.40) and (9.41) indicate that the interesting phenomena of power transfer due to fluctuation,

described in Secs. 6 and 7, do not occur for pulses of finite total power (cf. (9.8)). The total power must be at least of order $1/\epsilon^2$ before cumulative phenomena due to fluctuation become significant. For example, when the load is matched so that $\Gamma_l = 0$, (9.41) and (9.7) show that within our approximation, there is no power reflected. This should be contrasted with the results of Secs. 6 and 7. The analysis of the pulse problem when (9.8) is not valid is considerably more complicated and will not be considered here.

In the remainder of this section we apply the above analysis to the following problem:

$$\mathcal{E}_g(t) = e^{-t^2/2s^2}\cos\omega_0 t, \tag{9.42}$$

$$\Gamma_g = \Gamma_l = 0, \tag{9.43}$$

$$\alpha(k) = \frac{k^2}{2}, \quad \beta(k) = \frac{k^2}{2}, \quad \gamma(k) = k^2, \quad \delta(k,k') = kk'. \tag{9.44}$$

The generator voltage is a Gaussian modulated pulse (9.42), the line is matched to both the generator and the load and the spectrum of the random process $\mu(x)$ is assumed flat (9.44). Both (9.42) and (9.44) violate our previous hypotheses which are convenient idealizations.

From (9.1) and (9.42) we obtain $e_g(\omega)$:

$$e_g(\omega) = \frac{s}{2}(e^{-(s^2/2)(\omega-\omega_0)^2} + e^{-(s^2/2)(\omega+\omega_0)^2} \tag{9.45}$$

From (9.43), (9.44) and (9.40), (9.37) we have

$$\lim_{\epsilon\to 0} E\{A(\tau/\epsilon^2, \sigma/\epsilon^2; k)\overline{A}(\tau/\epsilon^2, \sigma/\epsilon^2; k')\} = [e_g(\omega)\bar{e}_g(\omega')/4Z_0]e^{-(1/2)(k^2+k'^2-kk')\sigma}. \tag{9.46}$$

Note again that (9.46) is independent of τ. On inserting (9.46) in (9.6) and performing the double integral we find that when $\epsilon \ll 1$ and $x \gg 1$ so that $\epsilon^2 x = \sigma$ then,

$$E\{|\mathcal{A}(l,x;t)|^2\} \sim \frac{s^2}{8Z_0}\left[\left(s^2 + \frac{3\epsilon^2 x}{2c^2}\right)\left(s^2 + \frac{\epsilon^2 x}{2c^2}\right)\right] \times \exp\left(\frac{-(t-x/c)^2}{2s^2 + 3\epsilon^2 x/c^2}\right)\left[\exp\left(\frac{-\omega_0^2 s^2\epsilon^2 x}{2c^2(s^2+\epsilon^2 x/2c^2)}\right) + \exp\left(\frac{-3\omega_0^2 s^2\epsilon^2 x}{2c^2(s^2+3\epsilon^2 x/2c^2)}\right)\cos\left(\frac{2\omega_0 s(t-x/c)}{s^2+3\epsilon^2 x/2c^2}\right)\right]. \tag{9.47}$$

By comparing $\mathcal{E}_g^2(t)$ in (9.42) and (9.47) we obtain the pulse spreading factor: $1 + 3\epsilon^2 x/2c^2 s^2$.

ACKNOWLEDGMENT

We wish to thank J. B. Keller for several discussions on the subject of this paper and for reading the manuscript and suggesting improvements.

*The research for this paper was supported in part by the Office of Naval Research under Contract No. N00014-67-A-0467-0015 and by the Air Force Office of Scientific Research under Grant No. AFOSR-71-2013.

† Present address: Dept. of Math., Virginia Polytechnic Inst. & State U., Blacksburg, Va.

[1]R. Z. Khasminskii, Theor. Probability Appl. **11**, 390 (1966).
[2]G. C. Papanicolaou and S. R. S. Varadhan, Comm. Pure Appl. Math. (to appear).
[3]Yu. L. Gazaryan, Zh. Eksp. Teor. Fiz. **56**, 1856 (1969) [Sov. Phys.-JETP 29, 996 (1969)].
[4]R. H. Lang, J. Math. Phys. (to appear).
[5]A. Schuster, Astrophys. J. **21**, 1 (1905).
[6]S. Chandrasekhar, *Radiative Transfer* (Oxford, U. P., London, 1950).
[7]D. Marcuse, IEEE Trans. Microwave Theory Tech. **20**, 541 (1972).
[8]M. S. Howe, Phil. Trans. Roy. Soc. London **274**, 523 (1973).
[9]I. M. Besieris and F. D. Tappert, J. Math. Phys. **13**, 704 (1973).
[10]F. P. Kapron, R. D. Mauer, and M. P. Teter, Appl. Opt. **11**, 1352 (1972).
[11]G. C. Papanicolaou, J. Math. Phys. **13**, 1912 (1972).
[12]K. M. Watson, Phys. Fluids **13**, 2514 (1970); J. Math. Phys. **10**, 688 (1968).
[13]C. W. Lau and K. M. Watson, J. Math. Phys. **11**, 3125 (1970).
[14]J. L. Peacher and K. M. Watson, J. Math. Phys. **11**, 1496 (1970).
[15]J. A. Morrison, J. Math. Anal. Appl. **39**, 13 (1972).
[16]U. Frisch, in *Probabilities Methods in Applied Mathematics*, edited by A. T. Bharucha-Reid (Academic, New York, 1968).
[17]J. A. Morrison and J. McKenna, *Proceedings of A. M. S. Symposium on Stochastic Equations, March 1972* (to appear).
[18]S. Helgason, in *Battelle Rencontres*, edited by C. De Witt (Benjamin, New York, 1968).
[19]R. Burridge and G. C. Papanicolaou, Commun. Pure Appl. Math. **25**, 715 (1972).
[20]W. Magnus, F. Oberhettinger, and R. P. Soni, *Formulas and Theorems for the Special Functions of Mathematical Physics* (Springer, New York, 1966).
[21]P. L. Sulem and U. Frisch, J. Plasma Phys. **8**, 217 (1972).
[22]P. L. Sulem, preprint, Observatoire de Nice.
[23]U. Frisch, C. Froeschle, J.-P. Scheidecker, and P. L. Sulem, preprint, Observatoire de Nice.
[24]J. Morrison, G. C. Papanicolaou, and J. B. Keller, Commun. Pure Appl. Math. **24**, 473 (1971).
[25]G. C. Papanicolaou, SIAM J. Appl. Math. (Soc. Ind. Appl. Math.) **21**, 13 (1971).
[26]G. C. Papanicolaou and J. B. Keller, SIAM J. Appl. Math. (Soc. Ind. Appl. Math.) **21**, 287 (1971).
[27]V. V. Sobolev, *A Treatise on Radiative Transfer* (Van Nostrand, Princeton, 1963).
[28]J. A. Morrison, IEEE Trans. MTT (to appear).